BANGALORE DEVELOPMENT AUTHORITY

CONSTRUCTION OF EIGHT LANE
BENGALURU BUSINESS CORRIDOR (BBC)

STRUCTURAL DRAWINGS
(PACKAGE 1)

STUP Consultants Pvt. Ltd.
assystem stup

MARCH'2026

PACKAGE 1 : STRUCTURES DRAWINGS LIST

SR. NO.	DRG. NO.	TITLE
		FLYOVER
		CH. 0+120.00 TO CH. 0+840.00 KM
1	N0533-E-MAJ-DD-001 R1	GENERAL ARRANGEMENT DRAWING FOR FLYOVER FROM CH. 0+120.00 TO CH. 0+840.00 KM (SHEET 1 OF 6)
2	N0533-E-MAJ-DD-002 R1	GENERAL ARRANGEMENT DRAWING FOR FLYOVER FROM CH. 0+120.00 TO CH. 0+840.00 KM (SHEET 2 OF 6)
3	N0533-E-MAJ-DD-002A R1	GENERAL ARRANGEMENT DRAWING FOR FLYOVER FROM CH. 0+120.00 TO CH. 0+840.00 KM (SHEET 3 OF 6)
4	N0533-E-MAJ-DD-002B R1	GENERAL ARRANGEMENT DRAWING FOR FLYOVER FROM CH. 0+120.00 TO CH. 0+840.00 KM (SHEET 4 OF 6)
5	N0533-E-MAJ-DD-003 R1	GENERAL ARRANGEMENT DRAWING FOR FLYOVER FROM CH. 0+120.00 TO CH. 0+840.00 KM (SHEET 5 OF 6)
6	N0533-E-MAJ-DD-004 R1	GENERAL ARRANGEMENT DRAWING FOR FLYOVER FROM CH. 0+120.00 TO CH. 0+840.00 KM (SHEET 6 OF 6)
		CH. 2+393 KM TO CH. 2+763 KM
7	N0533-E-MAJ-DD-020 R0	GENERAL ARRANGEMENT DRAWING FOR FLYOVER FROM CH. 2+403.00 TO CH. 2+768.00 KM (SHEET 1 OF 3)
8	N0533-E-MAJ-DD-021 R0	GENERAL ARRANGEMENT DRAWING FOR FLYOVER FROM CH. 2+403.00 TO CH. 2+768.00 KM (SHEET 2 OF 3)
9	N0533-E-MAJ-DD-022 R0	GENERAL ARRANGEMENT DRAWING FOR FLYOVER FROM CH. 2+403.00 TO CH. 2+768.00 KM (SHEET 3 OF 3)
		CH. 14+115.40 KM TO CH. 15+020.0KM
10	N0533-E-MAJ-DD-013 R0	GENERAL ARRANGEMENT DRAWING FOR FLYOVER FROM CH. 14+115.40 TO CH. 14+020.00 KM (SHEET 1 OF 7)
11	N0533-E-MAJ-DD-014 R0	GENERAL ARRANGEMENT DRAWING FOR FLYOVER FROM CH. 14+115.40 TO CH. 14+020.00 KM (SHEET 2 OF 7)
12	N0533-E-MAJ-DD-015 R0	GENERAL ARRANGEMENT DRAWING FOR FLYOVER FROM CH. 14+115.40 TO CH. 14+020.00 KM (SHEET 3 OF 7)
13	N0533-E-MAJ-DD-016 R0	GENERAL ARRANGEMENT DRAWING FOR FLYOVER FROM CH. 14+115.40 TO CH. 14+020.00 KM (SHEET 4 OF 7)
14	N0533-E-MAJ-DD-017 R0	GENERAL ARRANGEMENT DRAWING FOR FLYOVER FROM CH. 14+115.40 TO CH. 14+020.00 KM (SHEET 5 OF 7)
15	N0533-E-MAJ-DD-018 R0	GENERAL ARRANGEMENT DRAWING FOR FLYOVER FROM CH. 14+115.40 TO CH. 14+020.00 KM (SHEET 6 OF 7)
16	N0533-E-MAJ-DD-019 R0	GENERAL ARRANGEMENT DRAWING FOR FLYOVER FROM CH. 14+115.40 TO CH. 14+020.00 KM (SHEET 7 OF 7)
		FOREST CROSSING
17	N0533-E-MAJ-DD-008 R0	GENERAL ARRANGEMENT DWG FOR FLYOVER AT FOREST CROSSING CH. 11+660 TO CH. 12+710 KM (SHEET 1 OF 7)
18	N0533-E-MAJ-DD-009 R0	GENERAL ARRANGEMENT DWG FOR FLYOVER AT FOREST CROSSING CH. 11+660 TO CH. 12+710 KM (SHEET 2 OF 7)
19	N0533-E-MAJ-DD-010 R0	GENERAL ARRANGEMENT DWG FOR FLYOVER AT FOREST CROSSING CH. 11+660 TO CH. 12+710 KM (SHEET 3 OF 7)
20	N0533-E-MAJ-DD-011 R0	GENERAL ARRANGEMENT DWG FOR FLYOVER AT FOREST CROSSING CH. 11+660 TO CH. 12+710 KM (SHEET 4 OF 7)
21	N0533-E-MAJ-DD-011A R0	GENERAL ARRANGEMENT DWG FOR FLYOVER AT FOREST CROSSING CH. 11+660 TO CH. 12+710 KM (SHEET 5 OF 7)
22	N0533-E-MAJ-DD-011B R0	GENERAL ARRANGEMENT DWG FOR FLYOVER AT FOREST CROSSING CH. 11+660 TO CH. 12+710 KM (SHEET 6 OF 7)
23	N0533-E-MAJ-DD-012 R0	GENERAL ARRANGEMENT DWG FOR FLYOVER AT FOREST CROSSING CH. 11+660 TO CH. 12+710 KM (SHEET 7 OF 7)
		LAKE CROSSING - CH. 11240 TO 11660
24	N0533-E-MAJ-DD-005 R0	GENERAL ARRANGEMENT DRAWING FOR FLYOVER AT LAKE CROSSING (TYPICAL) (SHEET 1 OF 3)
25	N0533-E-MAJ-DD-006 R0	GENERAL ARRANGEMENT DRAWING FOR FLYOVER AT LAKE CROSSING (TYPICAL) (SHEET 2 OF 3)
26	N0533-E-MAJ-DD-007 R0	GENERAL ARRANGEMENT DRAWING FOR FLYOVER AT LAKE CROSSING (TYPICAL) (SHEET 3 OF 3)
		MINOR BRIDGE_GAS PIPE LINE CROSSING
		CH. 6+875
27	N0533-E-MAJ-DD-101 R0	GENERAL ARRANGEMENT DRAWING FOR MINOR BRIDGE AT CH. 6+875 Km FOR MRCL PIPE LINE (SHEET 1 OF 2)
28	N0533-E-MAJ-DD-102 R0	GENERAL ARRANGEMENT DRAWING FOR MINOR BRIDGE AT CH. 6+875 Km FOR MRCL PIPE LINE (SHEET 2 OF 2)
		ROB
		CH. 4+355
29	N0533-E-MAJ-DD-201 R1	GENERAL ARRANGEMENT DRAWING FOR ROB FROM CH. 4+158.72 Km TO CH. 4+265.00 Km
		CH. 15+020 TO 15+274
30	N0533-E-MAJ-DD-202 R0	GENERAL ARRANGEMENT DRAWING FOR ROB FROM CH. 15+020.00 Km TO CH. 15+274.00 Km
		CH. 16+009
31	N0533-E-MAJ-DD-203 R0	GENERAL ARRANGEMENT DRAWING FOR ROB FROM CH. 16+009 Km TO CH. 16+113.00 Km

Disregard or Ignore this Structure at the said chainage.

PACKAGE 1 : STRUCTURES DRAWINGS LIST

SR. NO.	DRG. NO.	TITLE
		OVERPASS STRUCTURE
		CH.3+560 / CH. 8+170
32	N0533-E-MAJ-DD-301 R1	TYPICAL GENERAL ARRANGEMENT DRAWING FOR OVERPASS
		CH. 18+681
33	N0533-E-MAJ-DD-302 R0	GENERAL ARRANGEMENT DRAWING FOR OVERPASS AT CH. 18+670.00 Km (SHEET 1 OF 2)
34	N0533-E-MAJ-DD-303 R0	GENERAL ARRANGEMENT DRAWING FOR OVERPASS AT CH. 18+670.00 Km (SHEET 2 OF 2)
		VUP
35	N0533-E-MAJ-DD-401 R1	GENERAL ARRANGEMENT DRAWING FOR VUP (TYPICAL) (SHEET 1 OF 2)
36	N0533-E-MAJ-DD-402 R1	GENERAL ARRANGEMENT DRAWING FOR VUP (TYPICAL) (SHEET 2 OF 2)
		VIADUCT
		CH. 4+265.00 KM TO CH. 4+620.00 KM
37	N0533-E-MAJ-DD-501 R1	GENERAL ARRANGEMENT DRAWING FOR VIADUCT FROM CH. 4+265.00 Km TO CH. 4+995.00 Km (SHEET 1 OF 7)
38	N0533-E-MAJ-DD-502 R1	GENERAL ARRANGEMENT DRAWING FOR VIADUCT FROM CH. 4+265.00 Km TO CH. 4+995.00 Km (SHEET 2 OF 7)
39	N0533-E-MAJ-DD-503 R1	GENERAL ARRANGEMENT DRAWING FOR VIADUCT FROM CH. 4+265.00 Km TO CH. 4+995.00 Km (SHEET 3 OF 7)
40	N0533-E-MAJ-DD-504 R1	GENERAL ARRANGEMENT DRAWING FOR VIADUCT FROM CH. 4+265.00 Km TO CH. 4+995.00 Km (SHEET 4 OF 7)
41	N0533-E-MAJ-DD-505 R1	GENERAL ARRANGEMENT DRAWING FOR VIADUCT FROM CH. 4+265.00 Km TO CH. 4+995.00 Km (SHEET 5 OF 7)
42	N0533-E-MAJ-DD-506 R1	GENERAL ARRANGEMENT DRAWING FOR VIADUCT FROM CH. 4+265.00 Km TO CH. 4+995.00 Km (SHEET 6 OF 7)
43	N0533-E-MAJ-DD-507 R1	GENERAL ARRANGEMENT DRAWING FOR VIADUCT FROM CH. 4+265.00 Km TO CH. 4+995.00 Km (SHEET 7 OF 7)
		BOX CULVERT
		SINGLE CELL - STRAIGHT - VARIABLE
44	N0533-E-MAJ-DD-601 R0	TYPICAL SINGLE CELL BOX CULVERT VARIABLE FILLING GENERAL ARRANGEMENT DRAWING (SHEET 1 OF 2)
45	N0533-E-MAJ-DD-602 R0	TYPICAL SINGLE CELL BOX CULVERT VARIABLE FILLING GENERAL ARRANGEMENT DRAWING (SHEET 2 OF 2)
		SINGLE CELL - SKEW - VARIABLE
46	N0533-E-MAJ-DD-605 R0	TYPICAL SINGLE CELL BOX CULVERT VARIABLE FILLING (SKEW) GENERAL ARRANGEMENT DRAWING (SHEET 1 OF 2)
47	N0533-E-MAJ-DD-606 R0	TYPICAL SINGLE CELL BOX CULVERT VARIABLE FILLING (SKEW) GENERAL ARRANGEMENT DRAWING (SHEET 2 OF 2)
		SINGLE CELL - SKEW - UPTO 2.5M FILL
48	N0533-E-MAJ-DD-607 R0	TYPICAL SINGLE CELL BOX CULVERT UPTO 2.5M FILLING (SKEW) GENERAL ARRANGEMENT DRAWING (SHEET 1 OF 2)
49	N0533-E-MAJ-DD-608 R0	TYPICAL SINGLE CELL BOX CULVERT UPTO 2.5M FILLING (SKEW) GENERAL ARRANGEMENT DRAWING (SHEET 2 OF 2)
		DOUBLE CELL - STRAIGHT
50	N0533-E-MAJ-DD-603 R1	TYPICAL DOUBLE CELL BOX CULVERT VARIABLE FILLING GENERAL ARRANGEMENT DRAWING (SHEET 1 OF 2)
51	N0533-E-MAJ-DD-604 R1	TYPICAL DOUBLE CELL BOX CULVERT VARIABLE FILLING GENERAL ARRANGEMENT DRAWING (SHEET 2 OF 2)
		DOUBLE CELL - SKEW
52	N0533-E-MAJ-DD-609 R0	TYPICAL DOUBLE CELL BOX CULVERT VARIABLE FILLING (SKEW) GENERAL ARRANGEMENT DRAWING (SHEET 1 OF 2)
53	N0533-E-MAJ-DD-610 R0	TYPICAL DOUBLE CELL BOX CULVERT VARIABLE FILLING (SKEW) GENERAL ARRANGEMENT DRAWING (SHEET 2 OF 2)

Consider this Typical detail for VUP at Chainage 20+000 to 20+600

THIS DRAWING IS THE PROPERTY OF STUP CONSULTANTS Pvt. LTD. IT SHOULD NOT BE USED, COPIED, OR REPRODUCED WITHOUT THEIR WRITTEN PERMISSION.

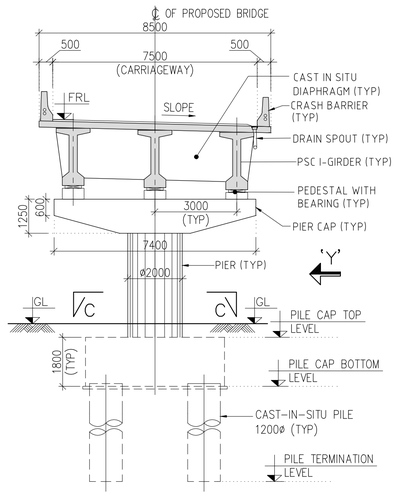

SECTION A–A
(SCALE 1:150)

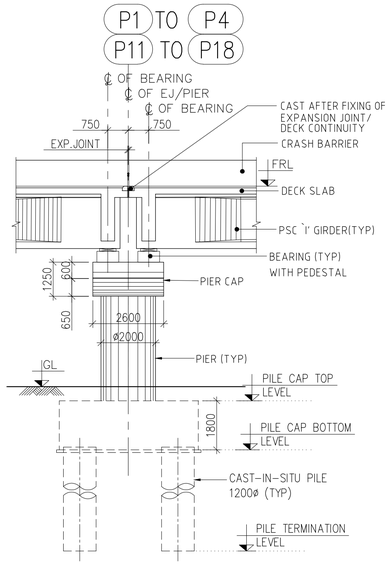

VIEW 'Y'
(SCALE 1:150)

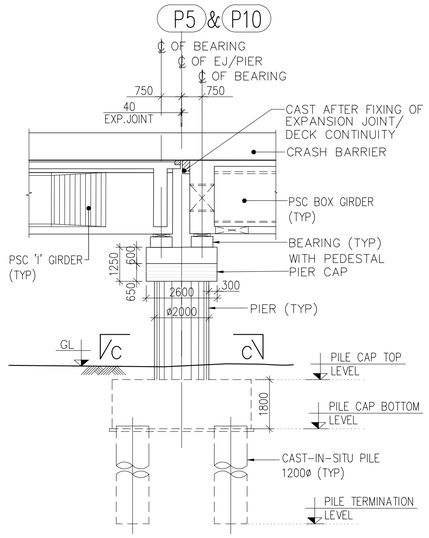

ELEVATION OF PIER
(SCALE 1:150)

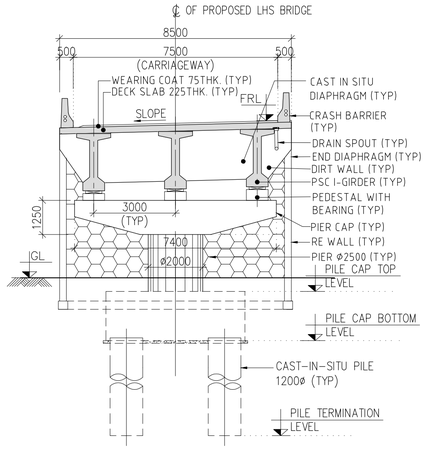

TYPICAL CROSS SECTION AT PIER ABUTMENT A2
(SCALE 1:150)

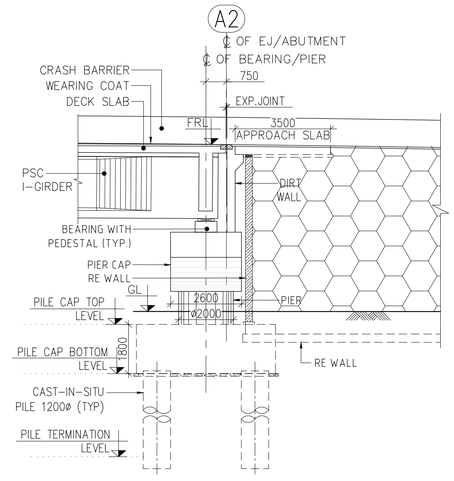

ELEVATION OF ABUTMENT
(SCALE 1:150)

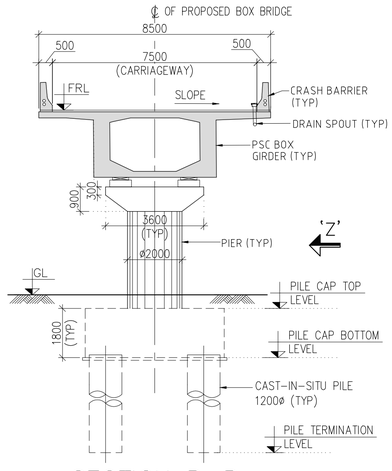

SECTION B–B
(SCALE 1:150)

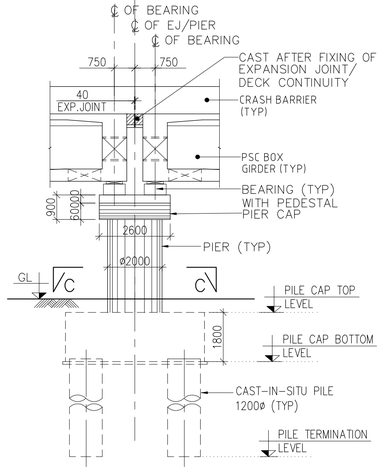

VIEW 'Z'
(SCALE 1:150)

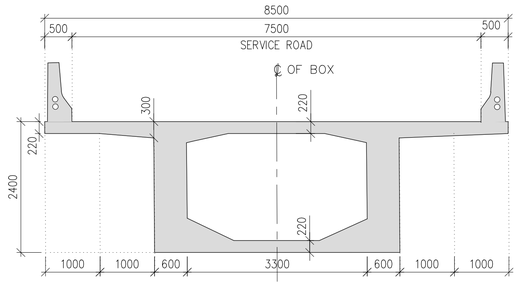

DETAIL OF PSC BOX GIRDER FOR 35m SPAN
(SCALE 1:75)

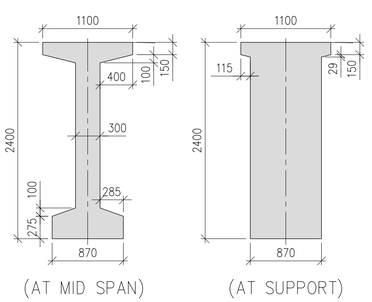

DETAIL OF PRECAST PSC 'I' GIRDER FOR 35m SPAN
(SCALE 1:50)

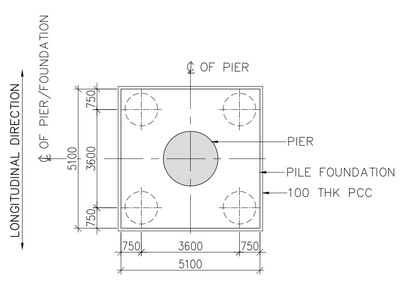

PLAN AT C–C
(SCALE 1:150)

THE DIMENSIONS SHOWN ARE FOR TENDER PURPOSE ONLY

NOTES:

1. ALL DIMENSIONS ARE IN MILLIMETERS, LEVELS ARE IN METERS & CHAINAGES ARE IN KILOMETERS, UNLESS MENTIONED OTHERWISE.
2. DIMENSIONS ARE NOT TO BE SCALED OFF ONLY WRITTEN DIMENSIONS ARE TO BE FOLLOWED.

REFERENCE DRAWINGS: (LATEST REVISION)

N0533/E/MAJ/DD–023 TO 026... GENERAL ARRANGEMENT DRAWING FOR FLYOVER FROM CH. 00+155.00 TO CH. 0+820.00 KM (SHEET–1 OF 5 TO SHEET 4 OF 5)

DATE	No.	REVISION	DRAWN	PREPARED	CHECKED	APPROVED
12-03-2026	R0	FIRST SUBMISSION	GSP	AGA	MD	MD

☑ APPROVAL	☐ CONSTRUCTION		
☐ INFORMATION	☐ TENDER		
☐ DRAFT	☐ PRELIMNARY		

RELEASED FOR

GIS					
HIGHWAYS			MAJOR STRUCTURES		
ELECTRICAL			IRRIGATION/ WATER RESOURCES		
BUILDINGS			PHE / PLUMBING/ FIREFIGHTING		
ARCHITECTURE			MECHANICAL / HVAC		
CHECKED BY	SIGN	DATE	CHECKED BY	SIGN	DATE

FOR INTERNAL OFFICE ONLY

CONSULTANT: STUP Consultants Pvt. Ltd.
REGISTERED OFFICE : Unit No.27/02, 27th Floor, Rupa Renaissance, P.No.D-33 & D-207, Juinagar, MIDC TTC Industrial Area, Sanpada, Navi Mumbai, Thane, Maharashtra-400705. Tel: +91 (022) 68067777, E-mail: mumbai@assystem.com

OFFICE OF ORIGIN : #69, JP & Devi Jambukeshwar Arcade 4th Floor, Millers Road Bengaluru – 560 052 Tel.: 080 – 40 39 79 79 Email : bangalore@assystem.com

OWNER: BANGALORE DEVELOPMENT AUTHORITY

DATE: 12-03-2026

CONTRACTOR

DRAWN: GSP

PROJECT: CONSTRUCTION OF EIGHT LANE BENGALURU BUSINESS CORRIDOR (BBC)

PREPARED: AGA

CHECKED: MD

TITLE: GENERAL ARRANGEMENT DRAWING FOR FLYOVER FROM CH. 00+155.00 TO CH. 0+820.00 KM (SHEET 5 OF 5)

APPROVED: MD

DRG.NO.: N0533/E/MAJ/DD–027 (R0)

SCALE: AS SHOWN

DISCLAIMER: ONLY APPROVED AND SIGNED HARD COPIES SHALL BE USED FOR CONSTRUCTION

THIS DRAWING IS THE PROPERTY OF STUP CONSULTANTS Pvt. LTD. IT SHOULD NOT BE USED, COPIED, OR REPRODUCED WITHOUT THEIR WRITTEN PERMISSION.

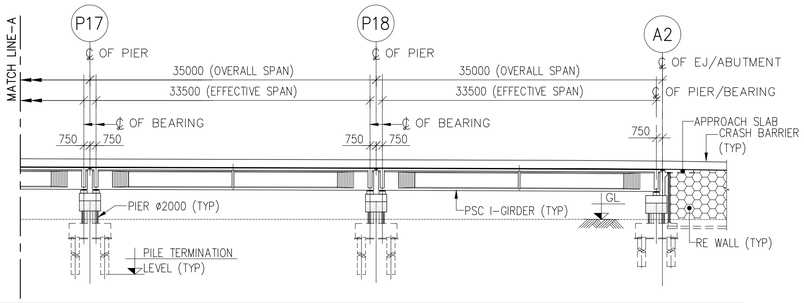

DATUM=850.000m

PROPOSED ROAD LEVEL ON C/L (m)	866.669	866.564	866.406
GROUND LEVEL ON C/L (m)	860.309	860.309	860.309
CHAINAGES (km)	0+750.00	0+785.00	0+820.00

LONGITUDINAL ELEVATION

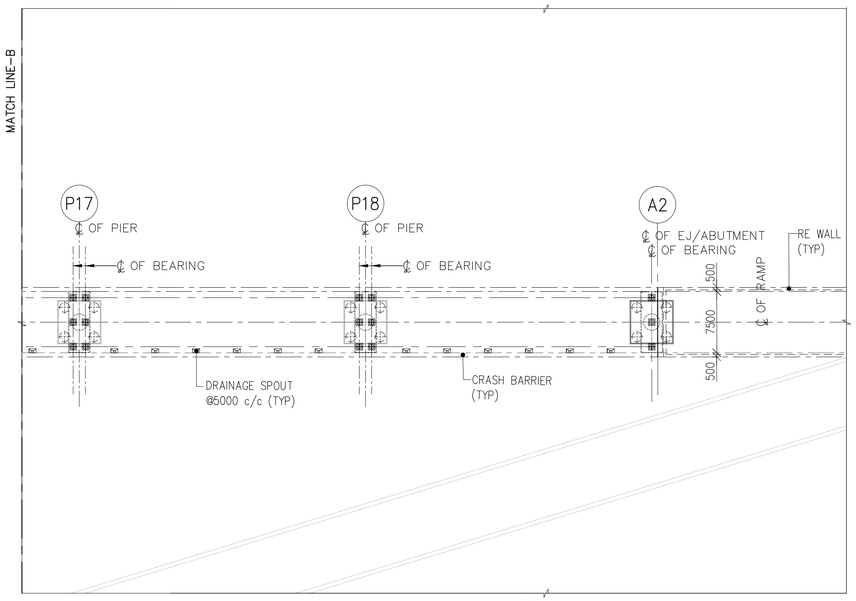

PLAN
(SCALE 1:500)

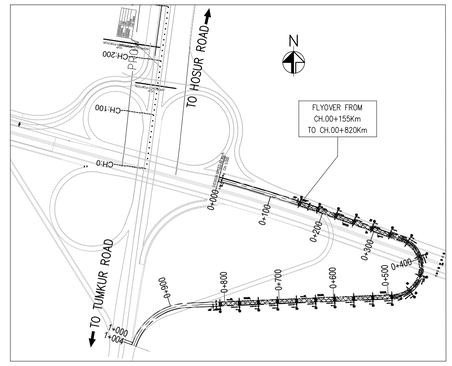

KEY PLAN
(SCALE 1:5000)

THE DIMENSIONS SHOWN ARE FOR TENDER PURPOSE ONLY

NOTES:

1. ALL DIMENSIONS ARE IN MILLIMETERS, LEVELS ARE IN METERS & CHAINAGES ARE IN KILOMETERS, UNLESS MENTIONED OTHERWISE.
2. DIMENSIONS ARE NOT TO BE SCALED OFF ONLY WRITTEN DIMENSIONS ARE TO BE FOLLOWED.

REFERENCE DRAWINGS: (LATEST REVISION)

N0533/E/MAJ/DD-023 TO 025... GENERAL ARRANGEMENT DRAWING FOR FLYOVER FROM CH. 00+155.00 TO CH. 0+820.00 KM (SHEET-1 OF 5 TO SHEET 3 OF 5)

N0533/E/MAJ/DD-027... GENERAL ARRANGEMENT DRAWING FOR FLYOVER FROM CH. 00+155.00 TO CH. 0+820.00 KM (SHEET-5 OF 5)

DATE	No.	REVISION	DRAWN	PREPARED	CHECKED	APPROVED
12-03-2026	R0	FIRST SUBMISSION	GSP	AGA	MD	MD

☑ APPROVAL	☐ CONSTRUCTION
☐ INFORMATION	☐ TENDER
☐ DRAFT	☐ PRELIMNARY

RELEASED FOR

GIS					
HIGHWAYS			MAJOR STRUCTURES		
ELECTRICAL			IRRIGATION/ WATER RESOURCES		
BUILDINGS			PHE / PLUMBING/ FIREFIGHTING		
ARCHITECTURE			MECHANICAL / HVAC		
CHECKED BY	SIGN	DATE	CHECKED BY	SIGN	DATE

FOR INTERNAL OFFICE ONLY

CONSULTANT
STUP Consultants Pvt. Ltd.
REGISTERED OFFICE : Unit No.2702, 27th Floor, Rupa Renaissance, P.No.D-33 & D-207, Julnagar, MIDC TTC Industrial Area, Turbhe, Navi Mumbai, Thane, Maharashtra-400705 Tel: +91 (022) 68067777, E-mail: mumbai@assystem.com
OFFICE OF ORIGIN : #69, JP & Devi Jambukeshwar Arcade 4th Floor, Millers Road Bengaluru – 560 052 Tel.: 080 – 40 39 79 79 Email : bangalore@assystem.com

OWNER: BANGALORE DEVELOPMENT AUTHORITY

CONTRACTOR

PROJECT: CONSTRUCTION OF EIGHT LANE BENGALURU BUSINESS CORRIDOR (BBC)

TITLE: GENERAL ARRANGEMENT DRAWING FOR FLYOVER FROM CH. 00+155.00 TO CH. 0+820.00 KM (SHEET 4 OF 5)

DRG.NO.: N0533/E/MAJ/DD-026 (R0)

DATE: 12-03-2026
DRAWN: GSP
PREPARED: AGA
CHECKED: MD
APPROVED: MD
SCALE: AS SHOWN

DISCLAIMER: ONLY APPROVED AND SIGNED HARD COPIES SHALL BE USED FOR CONSTRUCTION

THIS DRAWING IS THE PROPERTY OF STUP CONSULTANTS Pvt. LTD. IT SHOULD NOT BE USED, COPIED, OR REPRODUCED WITHOUT THEIR WRITTEN PERMISSION.

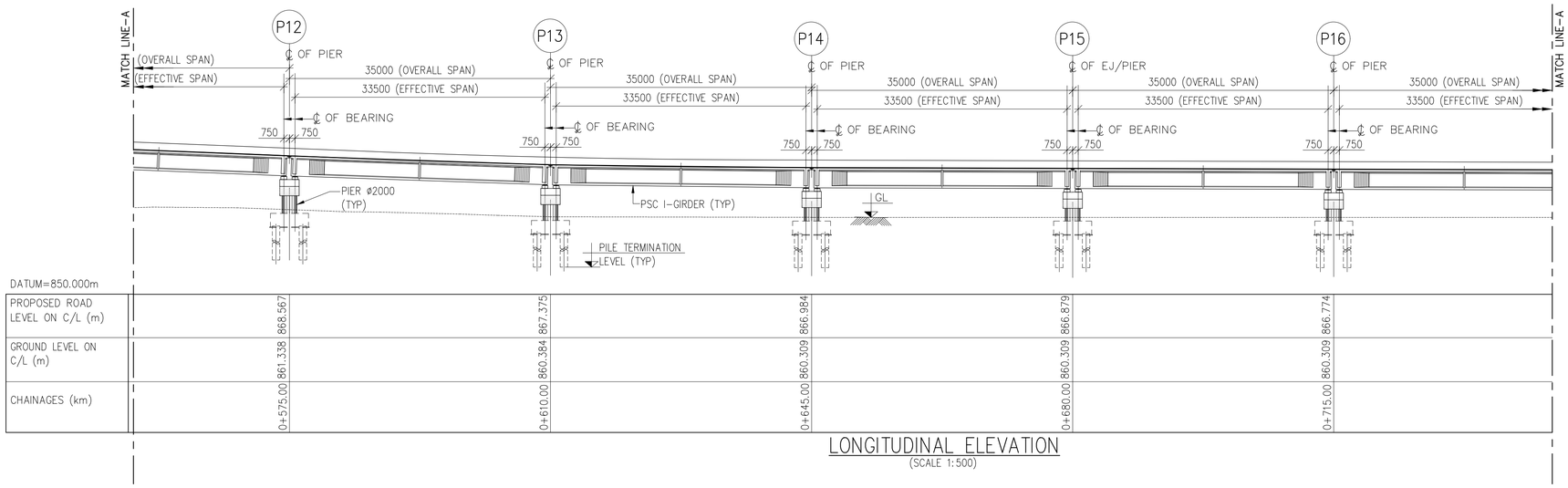

LONGITUDINAL ELEVATION
(SCALE 1:500)

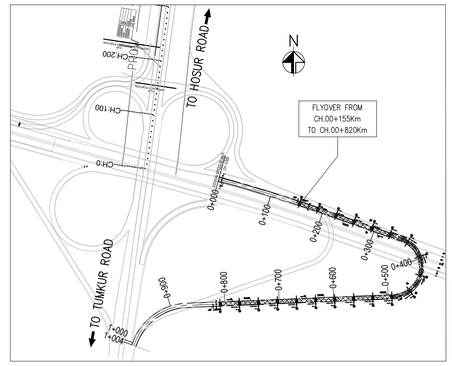

KEY PLAN
(SCALE 1:5000)

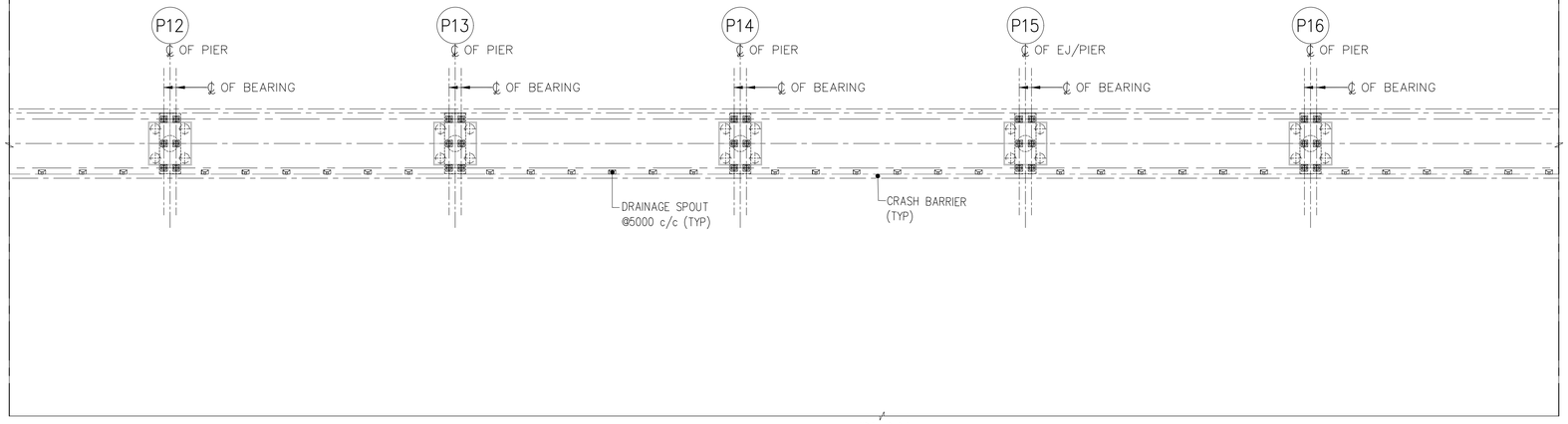

PLAN
(SCALE 1:500)

THE DIMENSIONS SHOWN ARE FOR TENDER PURPOSE ONLY

NOTES:

1. ALL DIMENSIONS ARE IN MILLIMETERS, LEVELS ARE IN METERS & CHAINAGES ARE IN KILOMETERS, UNLESS MENTIONED OTHERWISE.
2. DIMENSIONS ARE NOT TO BE SCALED OFF ONLY WRITTEN DIMENSIONS ARE TO BE FOLLOWED.

REFERENCE DRAWINGS: (LATEST REVISION)

N0533/E/MAJ/DD-023 & 024... GENERAL ARRANGEMENT DRAWING FOR FLYOVER FROM CH. 00+155.00 TO CH. 0+820.00 KM (SHEET-1 OF 5 TO SHEET-2 OF 5)

N0533/E/MAJ/DD-026 TO 027... GENERAL ARRANGEMENT DRAWING FOR FLYOVER FROM CH. 00+155.00 TO CH. 0+820.00 KM (SHEET-4 OF 5 TO SHEET-5 OF 5)

DATE	No.	REVISION	DRAWN	PREPARED	CHECKED	APPROVED
12-03-2026	R0	FIRST SUBMISSION	GSP	AGA	MD	MD

☑ APPROVAL ☐ CONSTRUCTION
☐ INFORMATION ☐ TENDER
☐ DRAFT ☐ PRELIMNARY

RELEASED FOR

GIS					
HIGHWAYS			MAJOR STRUCTURES		
ELECTRICAL			IRRIGATION/ WATER RESOURCES		
BUILDINGS			PHE / PLUMBING/ FIREFIGHTING		
ARCHITECTURE			MECHANICAL / HVAC		
CHECKED BY	SIGN	DATE	CHECKED BY	SIGN	DATE

FOR INTERNAL OFFICE ONLY

CONSULTANT: STUP Consultants Pvt. Ltd.
REGISTERED OFFICE : Unit No.2702, 27th Floor, Rupa Renaissance, P.No.D-33 & D-207, Juinagar, MIDC TTC Industrial Area, Turbhe, Navi Mumbai, Thane, Maharashtra-400705. Tel: +91 (022) 68067777, E-mail: mumbai@assystem.com
OFFICE OF ORIGIN : #69, JP & Devi Jambukeshwar Arcade 4th Floor, Millers Road Bengaluru – 560 052 Tel.: 080 – 40 39 79 79 Email : bangalore@assystem.com

OWNER: BANGALORE DEVELOPMENT AUTHORITY
CONTRACTOR:
PROJECT: CONSTRUCTION OF EIGHT LANE BENGALURU BUSINESS CORRIDOR (BBC)
TITLE: GENERAL ARRANGEMENT DRAWING FOR FLYOVER FROM CH. 00+155.00 TO CH. 0+820.00 KM (SHEET 3 OF 5)
DRG.NO.: N0533/E/MAJ/DD-025 (R0)

DATE: 12-03-2026
DRAWN: GSP
PREPARED: AGA
CHECKED: MD
APPROVED: MD
SCALE: AS SHOWN

DISCLAIMER: ONLY APPROVED AND SIGNED HARD COPIES SHALL BE USED FOR CONSTRUCTION

THIS DRAWING IS THE PROPERTY OF STUP CONSULTANTS Pvt. LTD. IT SHOULD NOT BE USED, COPIED, OR REPRODUCED WITHOUT THEIR WRITTEN PERMISSION.

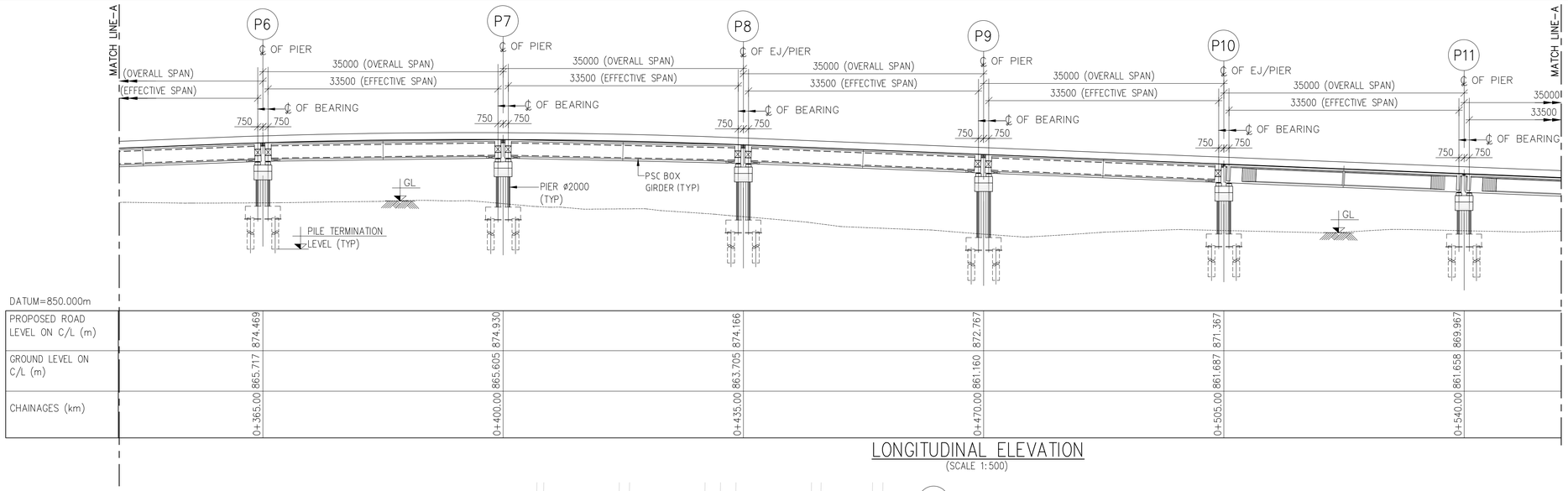

DATUM=850.000m

PROPOSED ROAD LEVEL ON C/L (m)	874.469	874.930	874.166	872.767	871.367	869.967
GROUND LEVEL ON C/L (m)	865.717	865.605	863.705	861.160	861.687	861.658
CHAINAGES (km)	0+365.00	0+400.00	0+435.00	0+470.00	0+505.00	0+540.00

LONGITUDINAL ELEVATION
(SCALE 1:500)

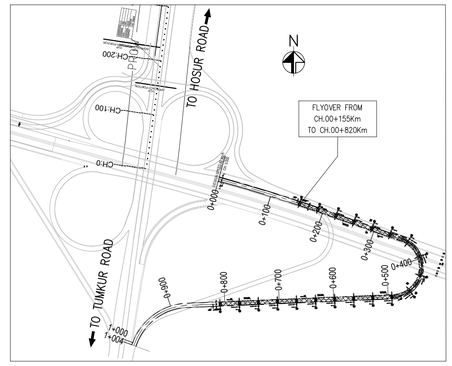

KEY PLAN
(SCALE 1:5000)

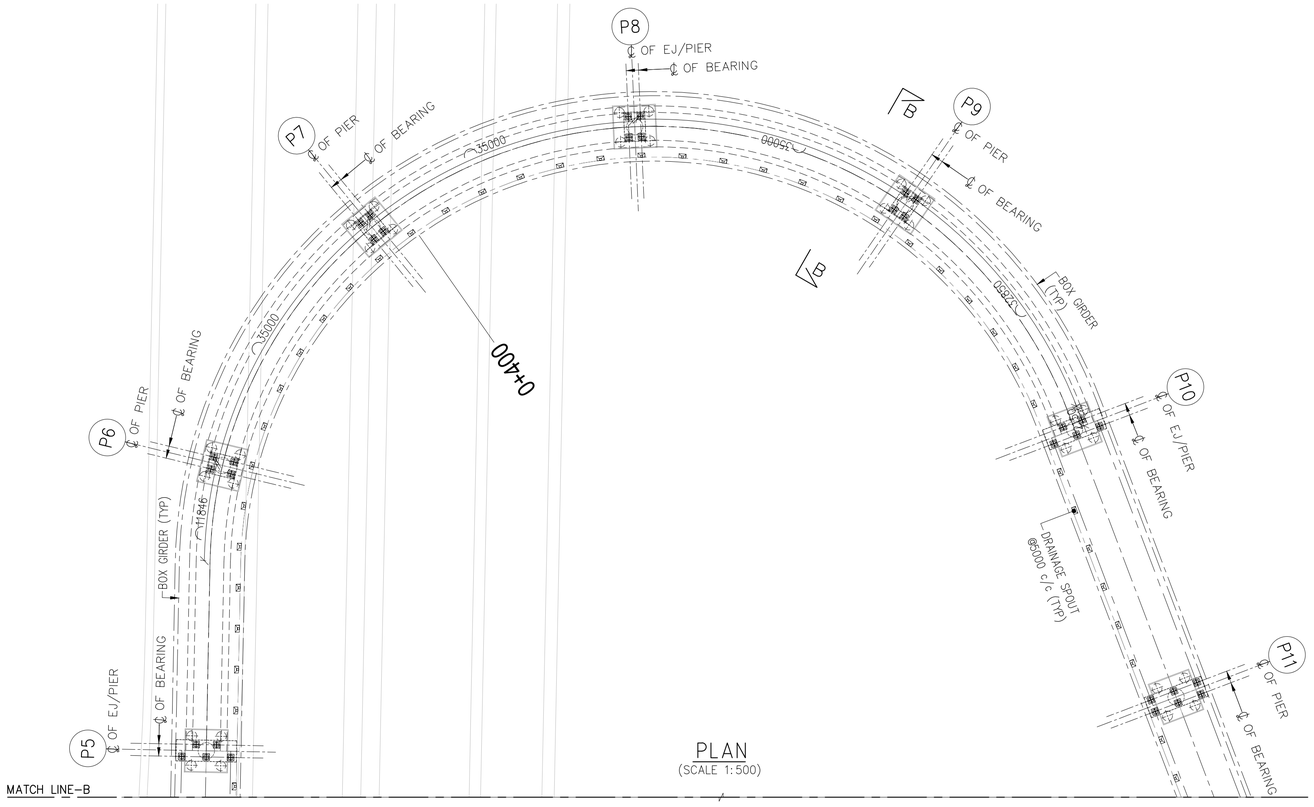

PLAN
(SCALE 1:500)

THE DIMENSIONS SHOWN ARE FOR TENDER PURPOSE ONLY

NOTES:

1. ALL DIMENSIONS ARE IN MILLIMETERS, LEVELS ARE IN METERS & CHAINAGES ARE IN KILOMETERS, UNLESS MENTIONED OTHERWISE.
2. DIMENSIONS ARE NOT TO BE SCALED OFF ONLY WRITTEN DIMENSIONS ARE TO BE FOLLOWED.

REFERENCE DRAWINGS: (LATEST REVISION)

N0533/E/MAJ/DD–023... GENERAL ARRANGEMENT DRAWING FOR FLYOVER FROM CH. 00+155.00 TO CH. 0+820.00 KM (SHEET–1 OF 5)

N0533/E/MAJ/DD–025 TO 027... GENERAL ARRANGEMENT DRAWING FOR FLYOVER FROM CH. 00+155.00 TO CH. 0+820.00 KM (SHEET–3 OF 5 TO SHEET–5 OF 5)

DATE	No.	REVISION	DRAWN	PREPARED	CHECKED	APPROVED
12-03-2026	R0	FIRST SUBMISSION	GSP	AGA	MD	MD

☑ APPROVAL	☐ CONSTRUCTION		
☐ INFORMATION	☐ TENDER		
☐ DRAFT	☐ PRELIMNARY		

RELEASED FOR

GIS					
HIGHWAYS			MAJOR STRUCTURES		
ELECTRICAL			IRRIGATION/ WATER RESOURCES		
BUILDINGS			PHE / PLUMBING/ FIREFIGHTING		
ARCHITECTURE			MECHANICAL / HVAC		
CHECKED BY	SIGN	DATE	CHECKED BY	SIGN	DATE

FOR INTERNAL OFFICE ONLY

CONSULTANT
STUP Consultants Pvt. Ltd.
REGISTERED OFFICE : Unit No.1702, 17th Floor, Rupa Renaissance, P.No.D-33 & D-207, Juinagar, MIDC TTC Industrial Area, Turbhe, Navi Mumbai, Thane, Maharashtra–400705. Tel: +91 (022) 68067777, E–mail: mumbai@assystem.com
OFFICE OF ORIGIN : #69, JP & Devi Jambukeshwar Arcade 4th Floor, Millers Road Bengaluru – 560 052 Tel.: 080 – 40 39 79 79 Email : bangalore@assystem.com

OWNER: BANGALORE DEVELOPMENT AUTHORITY

CONTRACTOR

PROJECT: CONSTRUCTION OF EIGHT LANE BENGALURU BUSINESS CORRIDOR (BBC)

TITLE: GENERAL ARRANGEMENT DRAWING FOR FLYOVER FROM CH. 00+155.00 TO CH. 0+820.00 KM (SHEET 2 OF 5)

DRG.NO.: N0533/E/MAJ/DD–024 (R0)

DATE: 12-03-2026
DRAWN: GSP
PREPARED: AGA
CHECKED: MD
APPROVED: MD
SCALE: AS SHOWN

DISCLAIMER: ONLY APPROVED AND SIGNED HARD COPIES SHALL BE USED FOR CONSTRUCTION

THIS DRAWING IS THE PROPERTY OF STUP CONSULTANTS Pvt. LTD. IT SHOULD NOT BE USED, COPIED, OR REPRODUCED WITHOUT THEIR WRITTEN PERMISSION.

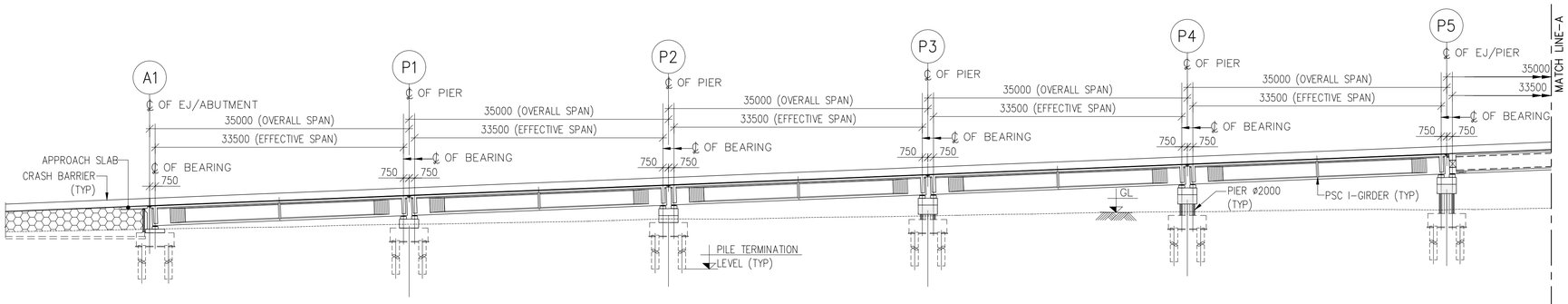

DATUM=850.000m

PROPOSED ROAD LEVEL ON C/L (m)	866.113	867.513	868.913	870.313	871.713	873.113
GROUND LEVEL ON C/L (m)	862.953	863.613	864.336	864.748	865.306	865.563
CHAINAGES (km)	0+155.00	0+190.00	0+225.00	0+260.00	0+295.00	0+330.00

LONGITUDINAL ELEVATION
(SCALE 1:500)

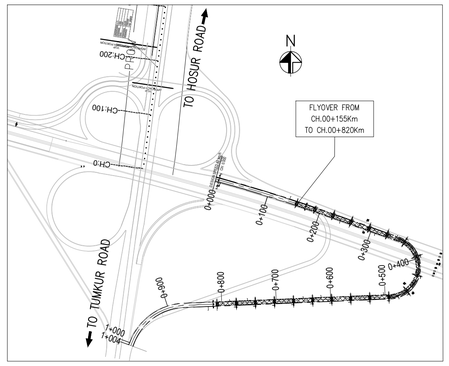

KEY PLAN
(SCALE 1:5000)

NOTES:

1. ALL THE DIMENSIONS ARE IN MILLIMETERS AND CHAINAGES ARE IN KILOMETERS
2. DIMENSIONS SHALL NOT BE SCALED OFF, ONLY WRITTEN DIMENSIONS SHALL BE FOLLOWED
3. GRADE OF CONCRETE SHALL BE FOLLOW AS:
   a) PSC SUPER STRUCTURE – M50
   b) PIER, PIER CAP & PEDESTAL – M45
   c) PILE & PILE CAP – M35
   d) CRASH BARRIER – M40
   e) APPROACH SLAB – M30
4. REINFORCEMENT SHALL BE HIGH STRENGTH DEFORMED BARS OF GRADE Fe500D CONFORMING TO IS:1786–2008 HAVING MINIMUM ELONGATION 14.5%
5. ALL BEARINGS ARE POT CUM PTFE TYPE.
6. EXPANSION JOINTS ARE WITH STRIP SEAL TYPE.
7. PERMANENT LINERS SHALL BE PROVIDED FOR PILES EXPOSED TO AGGRESSIVE SOIL.
8. DIMENSION OF STRUCTURAL MEMBERS SHOWN ARE INDICATIVE ONLY WHICH SHALL BE CONSIDERED BASED ON DETAILED DESIGN.
9. ABOVE DETAILS ARE OF TYPICAL NATURE TO INDICATE THE TYPE OF STRUCTURE AND SPACING OF STRUCTURAL MEMBER. ACTUAL CONSTRUCTION DESIGN MAY BE DIFFERENT BASED ON SITE CONDITIONS.
10. PILE CAPACITY CONSIDERED AS 375T FOR 1.2 DIA PILE OF 25M LENGTH FOR FOUNDATION DESIGN.
11. FOR CAMBER/SUPERELEVATION AND CROSS SECTION OF HIGHWAY AT SPECIFIC STRUCTURE LOCATIONS, RELEVANT TYPICAL CROSS SECTION DRAWING SHALL BE REFERRED.

LEGEND:

1) FRL – FINISHED ROAD LEVEL
2) EBL – EXISTING BED LEVEL
3) EJ – EXPANSION JOINT
4) ⊗ ↑ – JACK POINT
5) TYP – TYPICAL
6) DC – DECK CONTINUES
7) GL – GROUND LEVEL

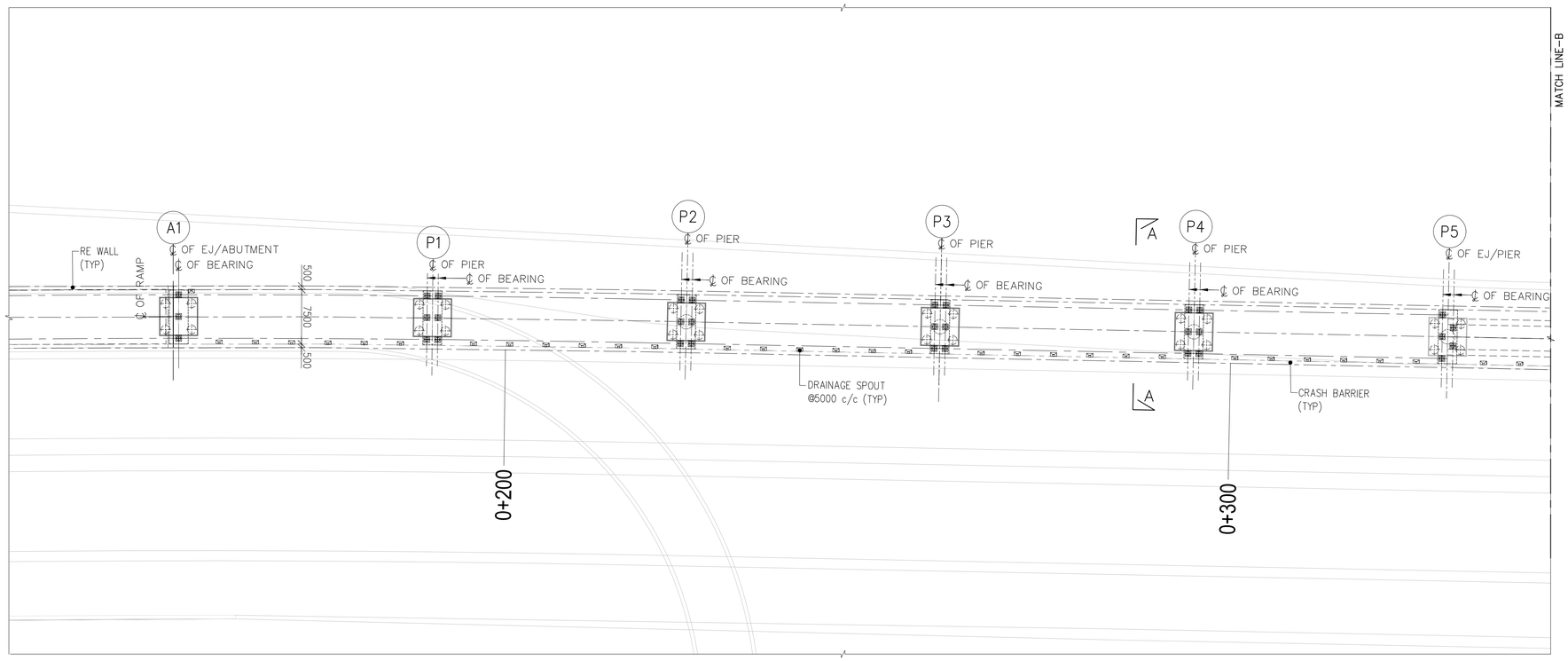

PLAN
(SCALE 1:500)

THE DIMENSIONS SHOWN ARE FOR TENDER PURPOSE ONLY

REFERENCE DRAWINGS: (LATEST REVISION)

N0533/E/MAJ/DD–024 TO 027... GENERAL ARRANGEMENT DRAWING FOR FLYOVER FROM CH. 00+155.00 TO CH. 0+820.00 KM (SHEET–2 OF 5 TO SHEET–5 OF 5)

DATE	No.	REVISION	DRAWN	PREPARED	CHECKED	APPROVED
12-03-2026	R0	FIRST SUBMISSION	GSP	AGA	MD	MD

☑ APPROVAL ☐ CONSTRUCTION
☐ INFORMATION ☐ TENDER
☐ DRAFT ☐ PRELIMNARY

RELEASED FOR

GIS					
HIGHWAYS			MAJOR STRUCTURES		
ELECTRICAL			IRRIGATION/ WATER RESOURCES		
BUILDINGS			PHE / PLUMBING/ FIREFIGHTING		
ARCHITECTURE			MECHANICAL / HVAC		
CHECKED BY	SIGN	DATE	CHECKED BY	SIGN	DATE

FOR INTERNAL OFFICE ONLY

CONSULTANT
STUP Consultants Pvt. Ltd.
REGISTERED OFFICE : Unit No.2102, 17th Floor, Rupa Renaissance, P.No.D–33 & D–207, Juinagar, MIDC TTC Industrial Area, Turbhe, Navi Mumbai, Thane, Maharashtra–400705. Tel: +91 (022) 68067777, E–mail: mumbai@assystem.com
OFFICE OF ORIGIN : #69, JF & Devi Jamboksheer Arcade 4th Floor, Millers Road Bengaluru – 560 052 Tel.: 080 – 40 39 79 79 Email : bangalore@assystem.com

OWNER: BANGALORE DEVELOPMENT AUTHORITY

CONTRACTOR

PROJECT: CONSTRUCTION OF EIGHT LANE BENGALURU BUSINESS CORRIDOR (BBC)

TITLE: GENERAL ARRANGEMENT DRAWING FOR FLYOVER FROM CH. 00+155.00 TO CH. 0+820.00 KM (SHEET 1 OF 5)

DRG.NO.: N0533/E/MAJ/DD–023 (R0)

DATE	DRAWN	PREPARED	CHECKED	APPROVED	SCALE
12-03-2026	GSP	AGA	MD	MD	AS SHOWN

DISCLAIMER: ONLY APPROVED AND SIGNED HARD COPIES SHALL BE USED FOR CONSTRUCTION

THIS DRAWING IS THE PROPERTY OF STUP CONSULTANTS Pvt. LTD. IT SHOULD NOT BE USED, COPIED, OR REPRODUCED WITHOUT THEIR WRITTEN PERMISSION.

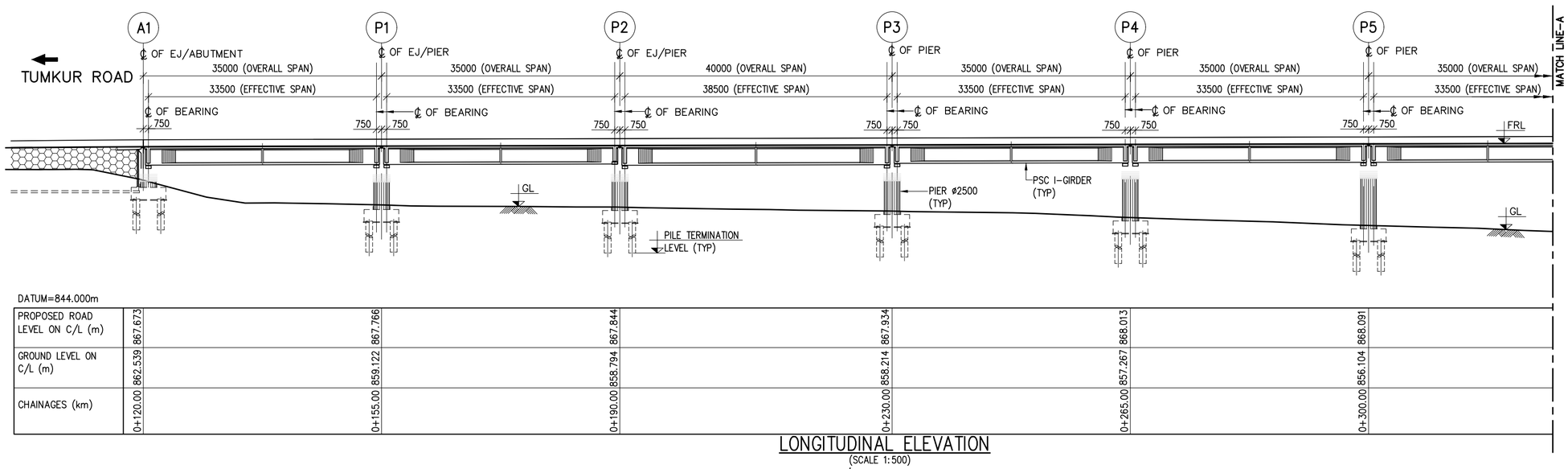

DATUM=844.000m

PROPOSED ROAD LEVEL ON C/L (m)	867.673	867.766	867.844	867.934	868.013	868.091
GROUND LEVEL ON C/L (m)	862.539	859.122	858.794	858.214	857.267	856.104
CHAINAGES (km)	0+120.00	0+155.00	0+190.00	0+230.00	0+265.00	0+300.00

LONGITUDINAL ELEVATION
(SCALE 1:500)

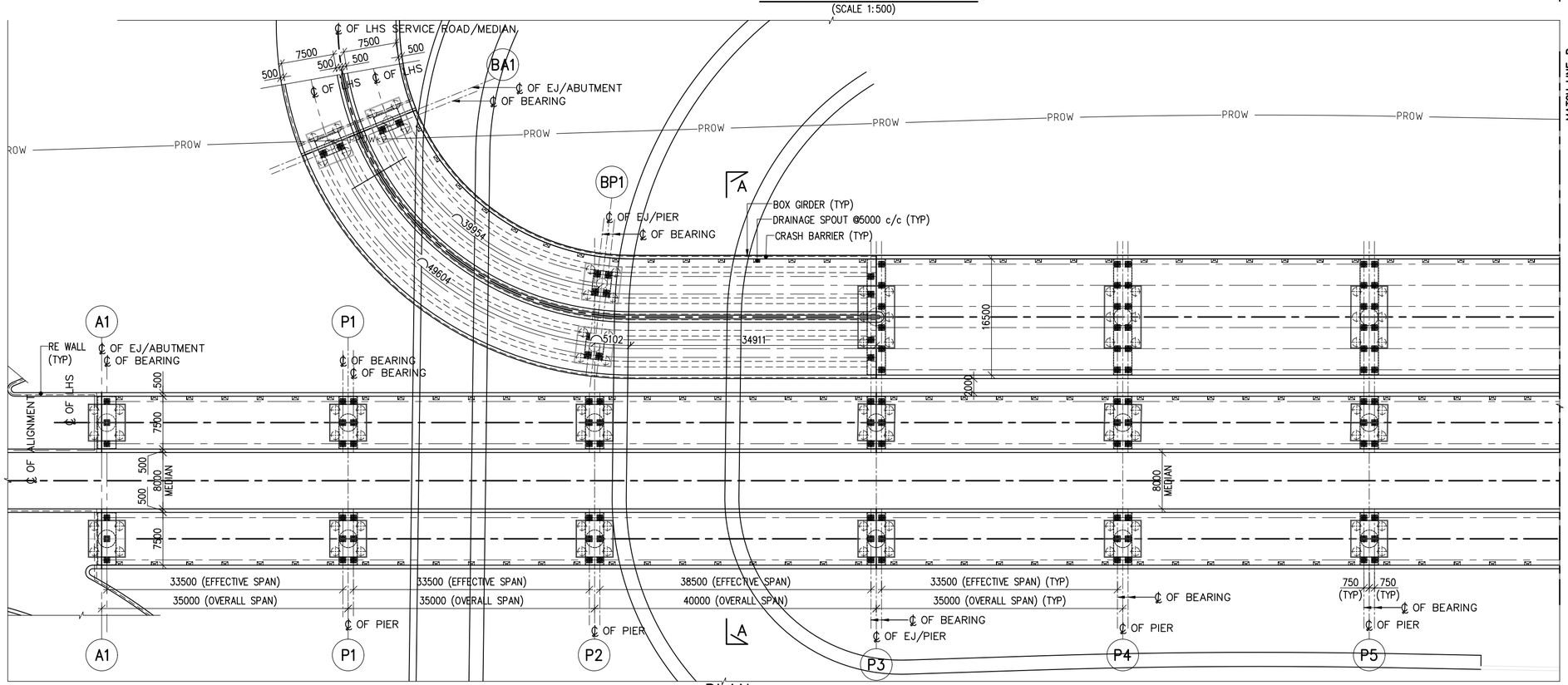

PLAN
(SCALE 1:500)

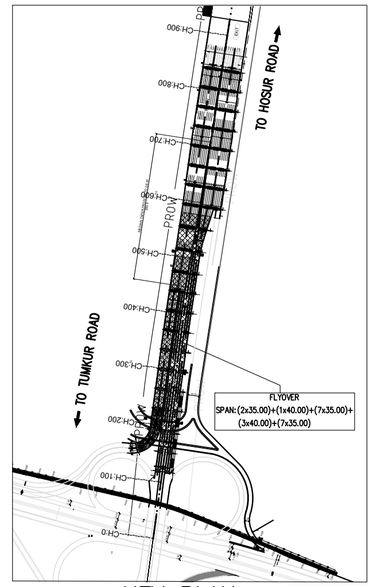

KEY PLAN
(SCALE 1:5000)

NOTES:

1. ALL THE DIMENSIONS ARE IN MILLIMETERS AND CHAINAGES ARE IN KILOMETERS
2. DIMENSIONS SHALL NOT BE SCALED OFF, ONLY WRITTEN DIMENSIONS SHALL BE FOLLOWED
3. GRADE OF CONCRETE SHALL BE FOLLOW AS:
   a) PSC SUPER STRUCTURE – M50
   b) PIER, PIER CAP & PEDESTAL – M45
   c) PILE & PILE CAP – M35
   d) CRASH BARRIER – M40
   e) APPROACH SLAB – M30
4. REINFORCEMENT SHALL BE HIGH STRENGTH DEFORMED BARS OF GRADE Fe500D CONFORMING TO IS:1786-2008 HAVING MINIMUM ELONGATION 14.5%
5. ALL BEARINGS ARE POT CUM PTFE TYPE.
6. EXPANSION JOINTS ARE WITH STRIP SEAL TYPE.
7. PERMANENT LINERS SHALL BE PROVIDED FOR PILES EXPOSED TO AGGRESSIVE SOIL.
8. DIMENSION OF STRUCTURAL MEMBERS SHOWN ARE INDICATIVE ONLY WHICH SHALL BE CONSIDERED BASED ON DETAILED DESIGN.
9. ABOVE DETAILS ARE OF TYPICAL NATURE TO INDICATE THE TYPE OF STRUCTURE AND SPACING OF STRUCTURAL MEMBER. ACTUAL CONSTRUCTION DESIGN MAY BE DIFFERENT BASED ON SITE CONDITIONS.
10. PILE CAPACITY CONSIDERED AS 375T FOR 1.2 DIA PILE OF 25M LENGTH FOR FOUNDATION DESIGN.
11. FOR CAMBER/SUPERELEVATION AND CROSS SECTION OF HIGHWAY AT SPECIFIC STRUCTURE LOCATIONS, RELEVANT TYPICAL CROSS SECTION DRAWING SHALL BE REFERRED.

LEGEND:

1) FRL – FINISHED ROAD LEVEL
2) EBL – EXISTING BED LEVEL
3) EJ – EXPANSION JOINT
4) ⊗ ⋈ – POT PTFE BEARING
5) ⊗ ↑ – JACK POINT
6) TYP – TYPICAL
7) DC – DECK CONTINUES
8) GL – GROUND LEVEL

REFERENCE DRAWINGS: (LATEST REVISION)

N0533/E/MAJ/DD-002 TO 004... GENERAL ARRANGEMENT DRAWING FOR FLYOVER FROM CH. 0+120.00 TO CH. 0+840.00 KM (SHEET-2 OF 6 TO SHEET-6 OF 6)

DATE	No.	REVISION	DRAWN	PREPARED	CHECKED	APPROVED
27-02-2026	R1	FOR APPROVAL	VSK	AGA	MD	MD
17-01-2026	R0	FIRST SUBMISSION	VSK	AGA	MD	MD

THE DIMENSIONS SHOWN ARE FOR TENDER PURPOSE ONLY

☑ APPROVAL	☐ CONSTRUCTION		
☐ INFORMATION	☐ TENDER		
☐ DRAFT	☐ PRELIMNARY		

RELEASED FOR

GIS					
HIGHWAYS			MAJOR STRUCTURES		
ELECTRICAL			IRRIGATION/ WATER RESOURCES		
BUILDINGS			PHE / PLUMBING/ FIREFIGHTING		
ARCHITECTURE			MECHANICAL / HVAC		
CHECKED BY	SIGN	DATE	CHECKED BY	SIGN	DATE

FOR INTERNAL OFFICE ONLY

CONSULTANT
STUP Consultants Pvt. Ltd.
REGISTERED OFFICE : Unit No.2702, 27th Floor, Rupa Renaissance, P.No.D-33 & D-207, Juinagar, MIDC ITC Industrial Area, Turbhe, Navi Mumbai, Thane, Maharashtra-400705. Tel: +91 (022) 68067777, E-mail: mumbai@assystem.com
OFFICE OF ORIGIN : #89, JP & Devi Jamboketwar Arcade 4th Floor, Millers Road Bengaluru - 560 052 Tel.: 080 - 40 39 79 79 Email : bangalore@assystem.com

OWNER: BANGALORE DEVELOPMENT AUTHORITY

DATE: 17-01-2026

CONTRACTOR

DRAWN: VSK

PROJECT: CONSTRUCTION OF EIGHT LANE BENGALURU BUSINESS CORRIDOR (BBC)

PREPARED: AGA

CHECKED: MD

TITLE: GENERAL ARRANGEMENT DRAWING FOR FLYOVER FROM CH. 0+120.00 TO CH. 0+840.00 KM (SHEET 1 OF 6)

APPROVED: MD

DRG.NO.: N0533/E/MAJ/DD-001 (R1)

SCALE: AS SHOWN

DISCLAIMER: ONLY APPROVED AND SIGNED HARD COPIES SHALL BE USED FOR CONSTRUCTION

THIS DRAWING IS THE PROPERTY OF STUP CONSULTANTS Pvt. LTD. IT SHOULD NOT BE USED, COPIED, OR REPRODUCED WITHOUT THEIR WRITTEN PERMISSION.

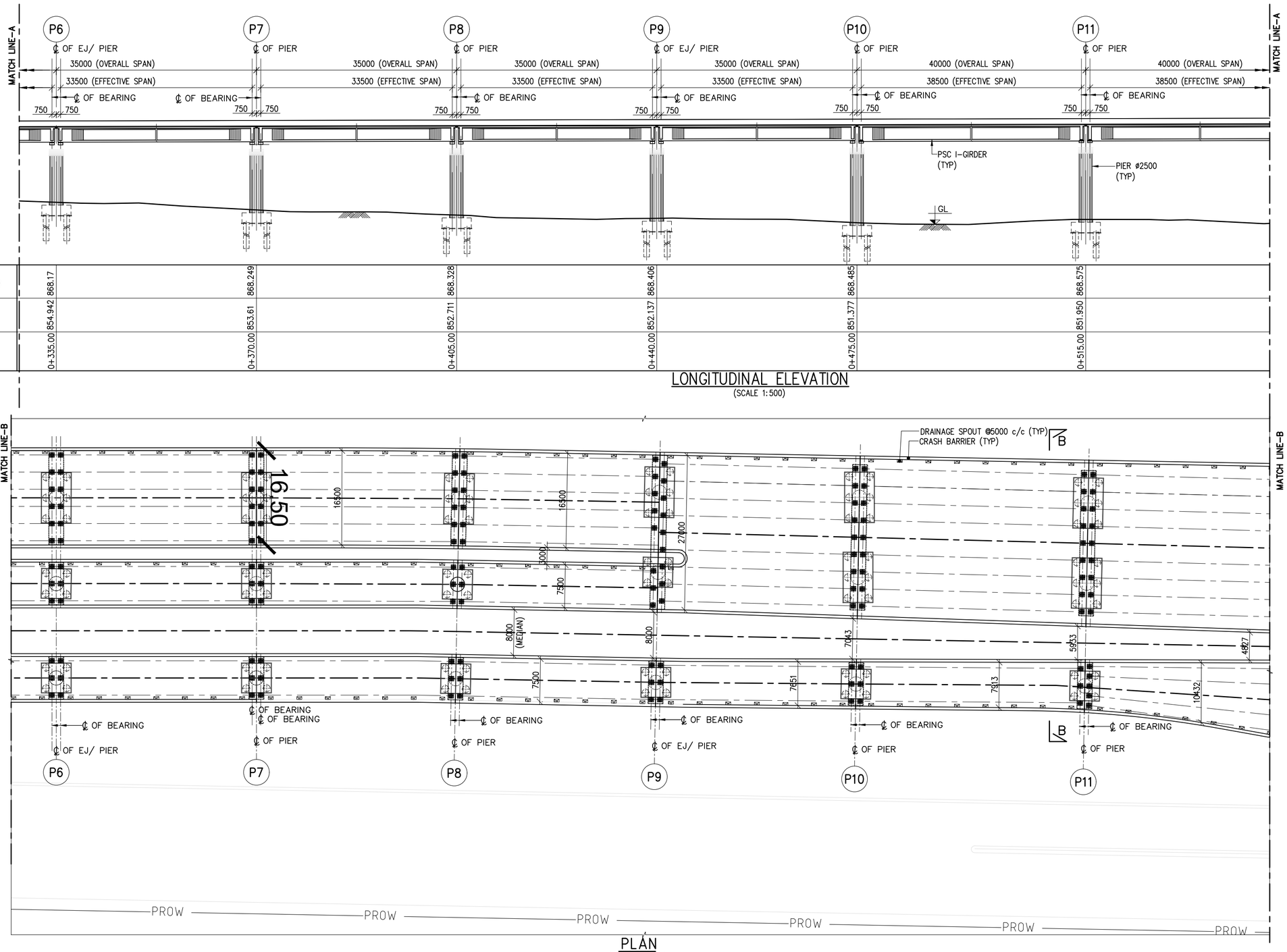

LONGITUDINAL ELEVATION
(SCALE 1:500)

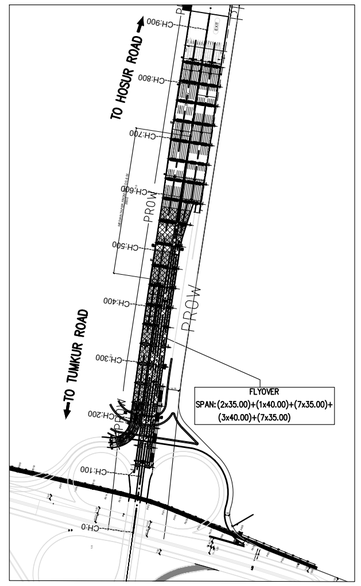

KEY PLAN
(SCALE 1:5000)

PLAN
(SCALE 1:500)

THE DIMENSIONS SHOWN ARE FOR TENDER PURPOSE ONLY

NOTES:

1. ALL DIMENSIONS ARE IN MILLIMETERS, LEVELS ARE IN METERS & CHAINAGES ARE IN KILOMETERS, UNLESS MENTIONED OTHERWISE.
2. DIMENSIONS ARE NOT TO BE SCALED OFF ONLY WRITTEN DIMENSIONS ARE TO BE FOLLOWED.

REFERENCE DRAWINGS: (LATEST REVISION)

N0533/E/MAJ/DD-001....	GENERAL ARRANGEMENT DRAWING FOR FLYOVER FROM CH. 0+120.00 Km TO CH. 0+840.00 Km (SHEET-1 OF 6)
N0533/E/MAJ/DD-002A TO 004....	GENERAL ARRANGEMENT DRAWING FOR FLYOVER FROM CH. 0+120.00 Km TO CH. 0+840.00 Km (SHEET-3 OF 6 TO SHEET-6 OF 6)

DATE	No.	REVISION	DRAWN	PREPARED	CHECKED	APPROVED
27-02-2026	R1	FOR APPROVAL	VSK	AGA	MD	MD
17-01-2026	R0	FIRST SUBMISSION	VSK	AGA	MD	MD

☑ APPROVAL ☐ CONSTRUCTION
☐ INFORMATION ☐ TENDER
☐ DRAFT ☐ PRELIMNARY

RELEASED FOR

GIS					
HIGHWAYS			MAJOR STRUCTURES		
ELECTRICAL			IRRIGATION/ WATER RESOURCES		
BUILDINGS			PHE / PLUMBING/ FIREFIGHTING		
ARCHITECTURE			MECHANICAL / HVAC		
CHECKED BY	SIGN	DATE	CHECKED BY	SIGN	DATE

FOR INTERNAL OFFICE ONLY

CONSULTANT
STUP Consultants Pvt. Ltd.
REGISTERED OFFICE : Unit. No.2702, 27th Floor, Rupa Renaissance, P.No.D-33 & D-207, Juinagar, MIDC TTC Industrial Area, Turbhe, Navi Mumbai, Thane, Maharashtra- 400705 Tel: +91 (022) 68067777, E-mail: mumbai@assystem.com
OFFICE OF ORIGIN : #16, JP & Devi Jambukeshwar Arcade 4th Floor, Millers Road Bengaluru - 560 052 Tel.: 080 - 40 39 79 79 Email : bangalore@assystem.com
OWNER
BANGALORE DEVELOPMENT AUTHORITY

DATE: 17-01-2026
CONTRACTOR
DRAWN: VSK
PROJECT: CONSTRUCTION OF EIGHT LANE BENGALURU BUSINESS CORRIDOR (BBC)
PREPARED: AGA
CHECKED: MD
TITLE: GENERAL ARRANGEMENT DRAWING FOR FLYOVER FROM CH. 0+120.00 TO CH. 0+840.00 KM (SHEET 2 OF 6)
APPROVED: MD
DRG.NO.: N0533/E/MAJ/DD-002 (R1)
SCALE: AS SHOWN

DISCLAIMER: ONLY APPROVED AND SIGNED HARD COPIES SHALL BE USED FOR CONSTRUCTION

THIS DRAWING IS THE PROPERTY OF STUP CONSULTANTS Pvt. LTD. IT SHOULD NOT BE USED, COPIED, OR REPRODUCED WITHOUT THEIR WRITTEN PERMISSION.

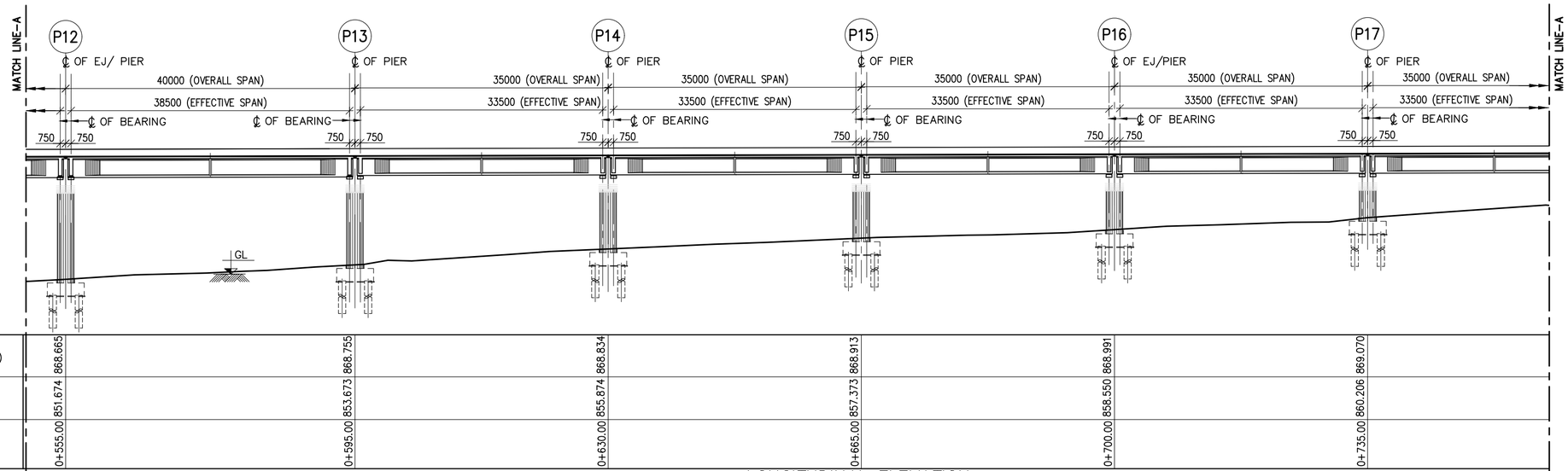

DATUM=844.000m

PROPOSED ROAD LEVEL ON C/L (m)	868.665	868.755	868.834	868.913	868.991	869.070
GROUND LEVEL ON C/L (m)	851.674	853.673	855.874	857.373	858.550	860.206
CHAINAGES (km)	0+555.00	0+595.00	0+630.00	0+665.00	0+700.00	0+735.00

LONGITUDINAL ELEVATION
(SCALE 1:500)

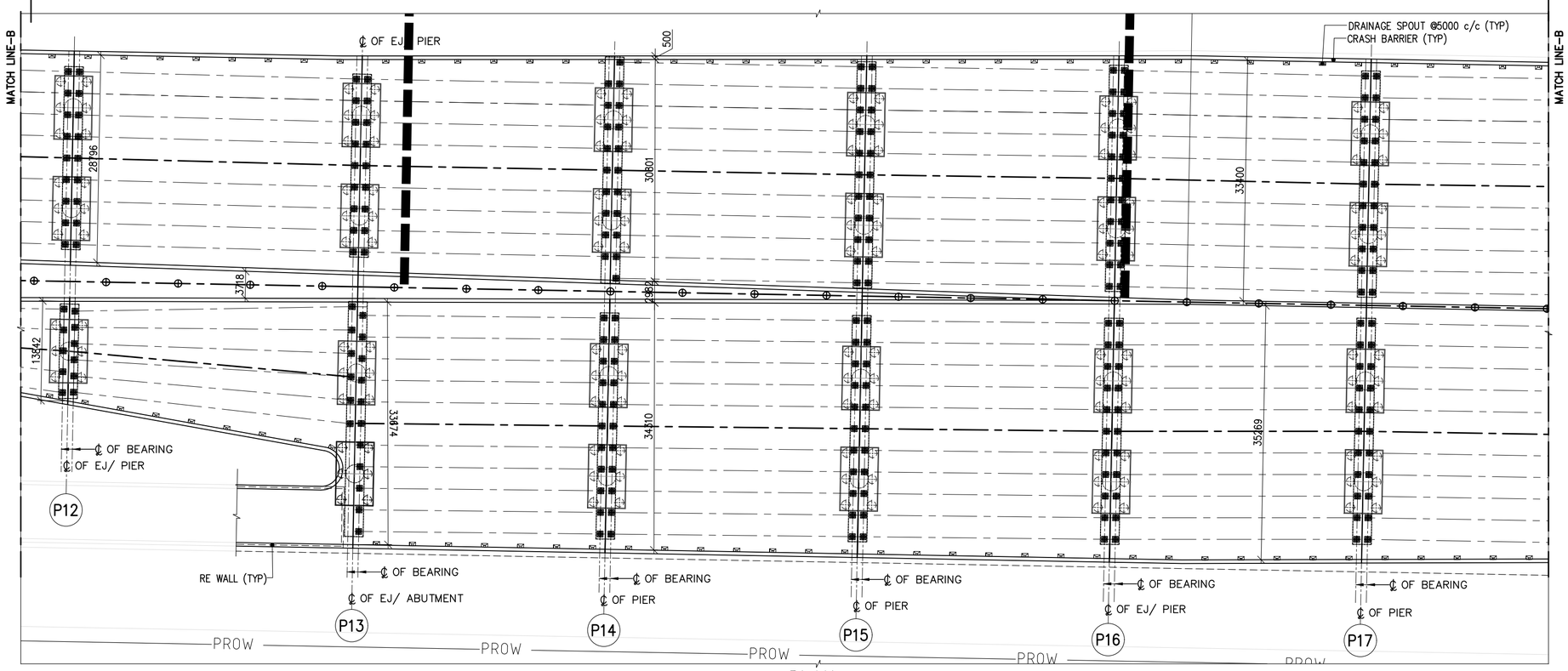

PLAN
(SCALE 1:500)

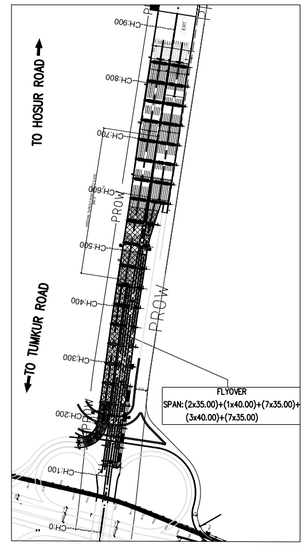

KEY PLAN
(SCALE 1:5000)

THE DIMENSIONS SHOWN ARE FOR TENDER PURPOSE ONLY

NOTES:

1. ALL DIMENSIONS ARE IN MILLIMETERS, LEVELS ARE IN METERS & CHAINAGES ARE IN KILOMETERS, UNLESS MENTIONED OTHERWISE.
2. DIMENSIONS ARE NOT TO BE SCALED OFF ONLY WRITTEN DIMENSIONS ARE TO BE FOLLOWED.

REFERENCE DRAWINGS: (LATEST REVISION)

N0533/E/MAJ/DD-001, 002....	GENERAL ARRANGEMENT DRAWING FOR FLYOVER FROM CH. 0+120.00 Km TO CH. 0+840.00 Km (SHEET-1 OF 5, SHEET-2 OF 5)
N0533/E/MAJ/DD-003 & 004....	GENERAL ARRANGEMENT DRAWING FOR FLYOVER FROM CH. 0+120.00 Km TO CH. 0+840.00 Km (SHEET-4 OF 5 & SHEET-5 OF 5)

DATE	No.	REVISION	DRAWN	PREPARED	CHECKED	APPROVED
27-02-2026	R1	FOR APPROVAL	VSK	AGA	MD	MD
17-01-2026	R0	FIRST SUBMISSION	VSK	AGA	MD	MD

☑ APPROVAL ☐ CONSTRUCTION
☐ INFORMATION ☐ TENDER
☐ DRAFT ☐ PRELIMNARY

RELEASED FOR

GIS						
HIGHWAYS			MAJOR STRUCTURES			
ELECTRICAL			IRRIGATION/ WATER RESOURCES			
BUILDINGS			PHE / PLUMBING/ FIREFIGHTING			
ARCHITECTURE			MECHANICAL / HVAC			
CHECKED BY	SIGN	DATE	CHECKED BY	SIGN	DATE	

FOR INTERNAL OFFICE ONLY

CONSULTANT
STUP Consultants Pvt. Ltd.
REGISTERED OFFICE : Unit. No.2702, 27th Floor, Rupa Renaissance, P.No.D-33 & D-207, Juinagar, MIDC TTC Industrial Area, Turbhe, Navi Mumbai, Thane, Maharashtra-400705. Tel: +91 (022) 68067777, E-mail: mumbai@assystem.com
OFFICE OF ORIGIN : #66, JP & Devi Jambukeshwar Arcade 4th Floor, Millers Road Bengaluru - 560 052 Tel.: 080 - 40 39 79 79 Email : bangalore@assystem.com

OWNER: BANGALORE DEVELOPMENT AUTHORITY

DATE: 17-01-2026

CONTRACTOR

DRAWN: VSK

PROJECT: CONSTRUCTION OF EIGHT LANE BENGALURU BUSINESS CORRIDOR (BBC)

PREPARED: AGA

CHECKED: MD

TITLE: GENERAL ARRANGEMENT DRAWING FOR FLYOVER FROM CH. 0+120.00 TO CH. 0+840.00 KM (SHEET 3 OF 6)

APPROVED: MD

DRG.NO.: N0533/E/MAJ/DD-002A (R1)

SCALE: AS SHOWN

DISCLAIMER: ONLY APPROVED AND SIGNED HARD COPIES SHALL BE USED FOR CONSTRUCTION

THIS DRAWING IS THE PROPERTY OF STUP CONSULTANTS Pvt. LTD. IT SHOULD NOT BE USED, COPIED, OR REPRODUCED WITHOUT THEIR WRITTEN PERMISSION.

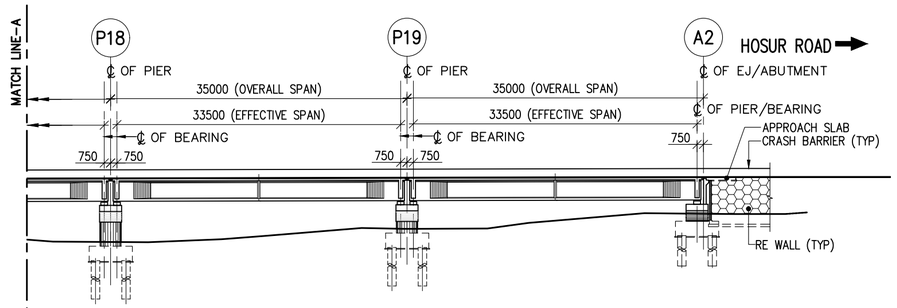

DATUM=844.000m

PROPOSED ROAD LEVEL ON C/L (m)	869.149	869.227	869.301
GROUND LEVEL ON C/L (m)	861.632	863.180	864.959
CHAINAGES (km)	0+770.00	0+805.00	0+840.00

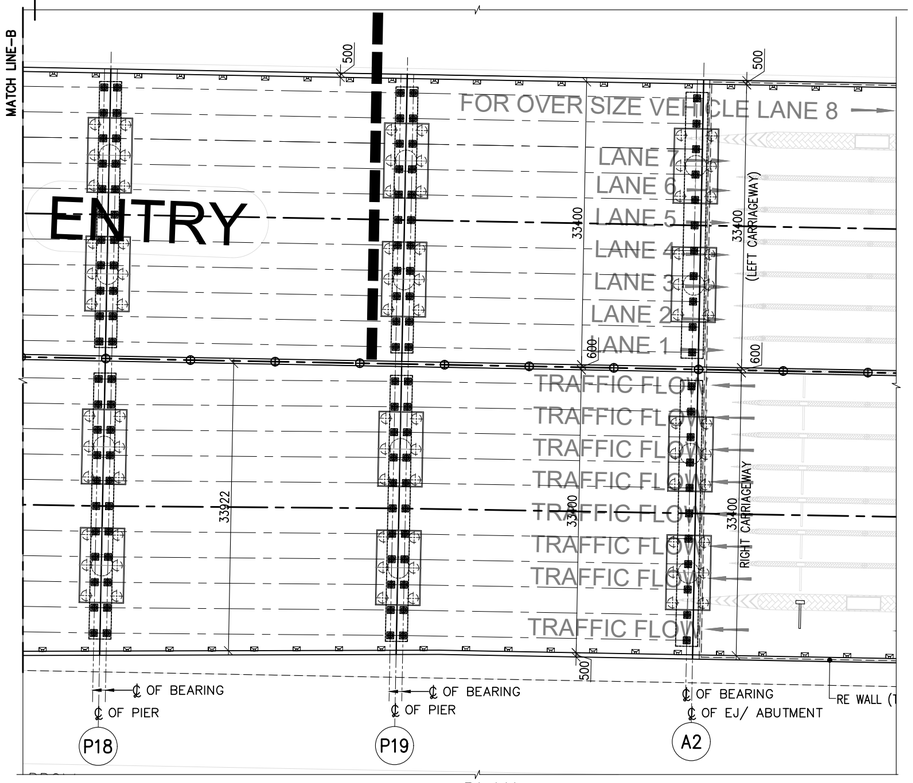

PLAN
(SCALE 1:500)

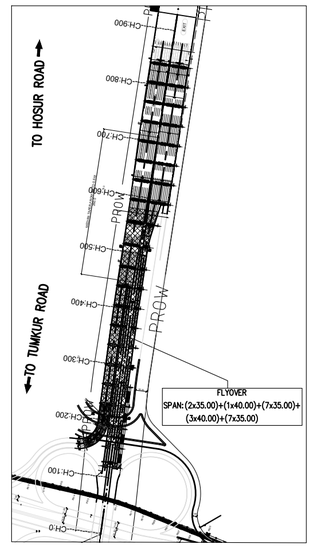

KEY PLAN
(SCALE 1:5000)

THE DIMENSIONS SHOWN ARE FOR TENDER PURPOSE ONLY

NOTES:

1. ALL DIMENSIONS ARE IN MILLIMETERS, LEVELS ARE IN METERS & CHAINAGES ARE IN KILOMETERS, UNLESS MENTIONED OTHERWISE.
2. DIMENSIONS ARE NOT TO BE SCALED OFF ONLY WRITTEN DIMENSIONS ARE TO BE FOLLOWED.

REFERENCE DRAWINGS: (LATEST REVISION)

N0533/E/MAJ/DD-001,002,002A....	GENERAL ARRANGEMENT DRAWING FOR FLYOVER FROM CH. 0+160.00 Km TO CH. 0+840.00 Km (SHEET-1 OF 6, SHEET-2 OF 6)
N0533/E/MAJ/DD-003 & 004....	GENERAL ARRANGEMENT DRAWING FOR FLYOVER FROM CH. 0+160.00 Km TO CH. 0+840.00 Km (SHEET-4 OF 6 & SHEET-6 OF 6)

DATE	No.	REVISION	DRAWN	PREPARED	CHECKED	APPROVED
27-02-2026	R1	FOR APPROVAL	VSK	AGA	MD	MD
17-01-2026	R0	FIRST SUBMISSION	VSK	AGA	MD	MD

☑ APPROVAL ☐ CONSTRUCTION
☐ INFORMATION ☐ TENDER
☐ DRAFT ☐ PRELIMNARY

RELEASED FOR

GIS					
HIGHWAYS			MAJOR STRUCTURES		
ELECTRICAL			IRRIGATION/ WATER RESOURCES		
BUILDINGS			PHE / PLUMBING/ FIREFIGHTING		
ARCHITECTURE			MECHANICAL / HVAC		
CHECKED BY	SIGN	DATE	CHECKED BY	SIGN	DATE

FOR INTERNAL OFFICE ONLY

CONSULTANT
STUP Consultants Pvt. Ltd.
REGISTERED OFFICE : Unit No.2702, 27th Floor, Rupa Renaissance, P.No.D-33 & D-207, Juinagar, MIDC TTC Industrial Area, Turbhe, Navi Mumbai, Thane, Maharashtra-400705 Tel: +91 (022) 68067777, E-mail: mumbai@assystem.com
OFFICE OF ORIGIN : #69, JP & Devi Jambulekshwar Arcade 4th Floor, Millers Road Bengaluru – 560 052 Tel.: 080 – 40 39 79 79 Email : bangalore@assystem.com

OWNER: BANGALORE DEVELOPMENT AUTHORITY

CONTRACTOR

PROJECT: CONSTRUCTION OF EIGHT LANE BENGALURU BUSINESS CORRIDOR (BBC)

TITLE: GENERAL ARRANGEMENT DRAWING FOR FLYOVER FROM CH. 0+120.00 TO CH. 0+840.00 KM (SHEET 4 OF 6)

DRG.NO.: N0533/E/MAJ/DD-002B (R1)

DATE: 17-01-2026
DRAWN: VSK
PREPARED: AGA
CHECKED: MD
APPROVED: MD
SCALE: AS SHOWN

DISCLAIMER: ONLY APPROVED AND SIGNED HARD COPIES SHALL BE USED FOR CONSTRUCTION

THIS DRAWING IS THE PROPERTY OF STUP CONSULTANTS Pvt. LTD. IT SHOULD NOT BE USED, COPIED, OR REPRODUCED WITHOUT THEIR WRITTEN PERMISSION.

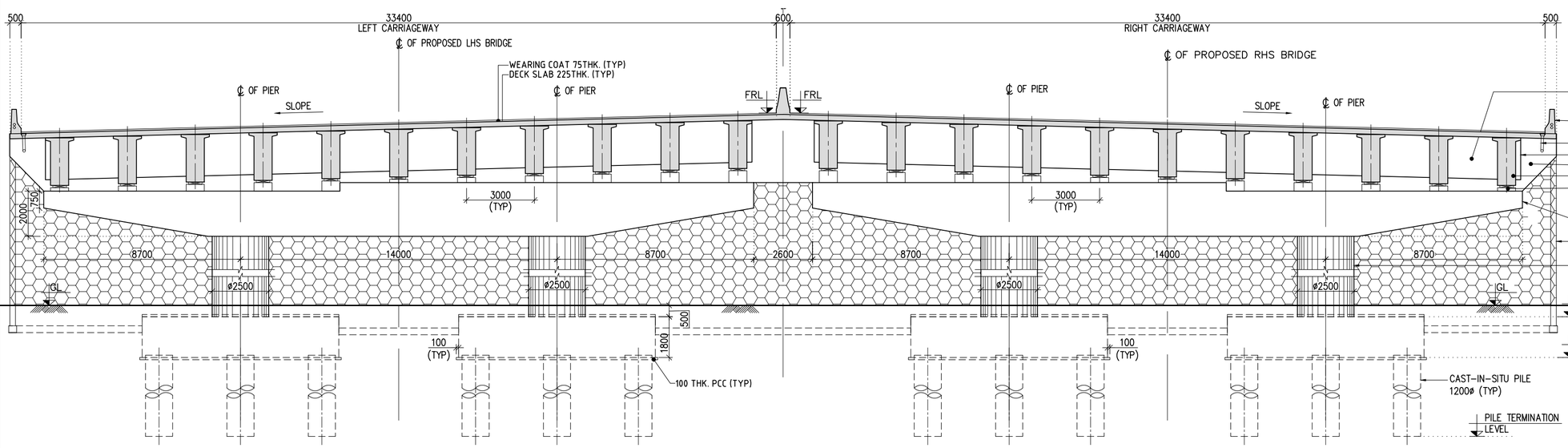

TYPICAL CROSS SECTION AT PIER ABUTMENT A2

(SCALE 1:150)

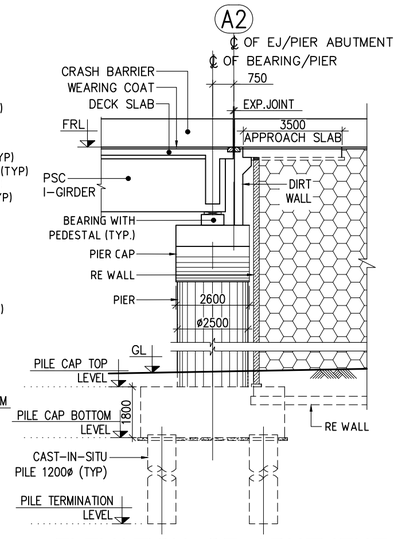

ELEVATION OF ABUTMENT

(SCALE 1:150)

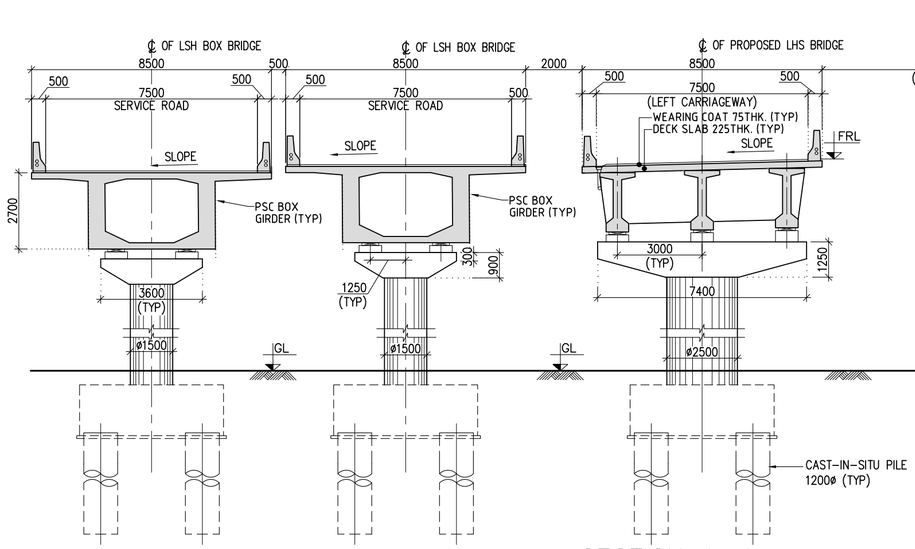

SECTION A–A

(SCALE 1:150)

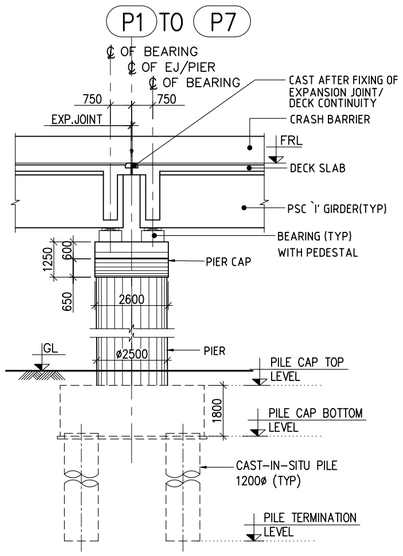

VIEW 'Y'

(SCALE 1:150)

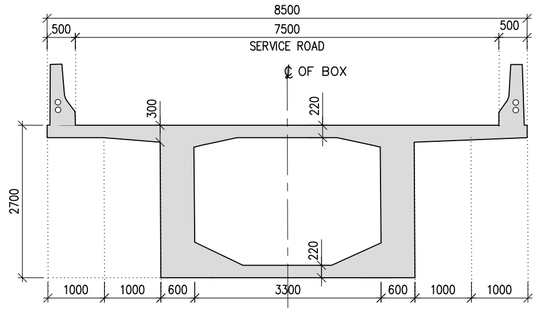

DETAIL OF BOX GIRDER FOR 40m SPAN

(SCALE 1:75)

NOTES:

1. ALL DIMENSIONS ARE IN MILLIMETERS, LEVELS ARE IN METERS & CHAINAGES ARE IN KILOMETERS, UNLESS MENTIONED OTHERWISE.
2. DIMENSIONS ARE NOT TO BE SCALED OFF ONLY WRITTEN DIMENSIONS ARE TO BE FOLLOWED.

REFERENCE DRAWINGS: (LATEST REVISION)

N0533/E/MAJ/DD-001 TO 002B....	GENERAL ARRANGEMENT DRAWING FOR FLYOVER FROM CH. 0+160.00 Km TO CH. 0+840.00 Km (SHEET-1 OF 6 TO SHEET-4 OF 6)
N0533/E/MAJ/DD-004....	GENERAL ARRANGEMENT DRAWING FOR FLYOVER FROM CH. 0+160.00 Km TO CH. 0+840.00 Km (SHEET-6 OF 6)

DATE	No.	REVISION	DRAWN	PREPARED	CHECKED	APPROVED
27-02-2026	R1	FOR APPROVAL	VSK	AGA	MD	MD
17-01-2026	R0	FIRST SUBMISSION	VSK	AGA	MD	MD

☑ APPROVAL ☐ CONSTRUCTION
☐ INFORMATION ☐ TENDER
☐ DRAFT ☐ PRELIMNARY

RELEASED FOR

GIS					
HIGHWAYS			MAJOR STRUCTURES		
ELECTRICAL			IRRIGATION/ WATER RESOURCES		
BUILDINGS			PHE / PLUMBING/ FIREFIGHTING		
ARCHITECTURE			MECHANICAL / HVAC		
CHECKED BY	SIGN	DATE	CHECKED BY	SIGN	DATE

FOR INTERNAL OFFICE ONLY

THE DIMENSIONS SHOWN ARE FOR TENDER PURPOSE ONLY

CONSULTANT
STUP Consultants Pvt. Ltd.
REGISTERED OFFICE : Unit No.2702, 27th Floor, Rupa Renaissance, P.No.D-33 & D-207, Juinagar, MIDC TTC Industrial Area, Turbhe, Navi Mumbai, Thane, Maharashtra-400705. Tel: +91 (022) 68067777, E-mail: mumbai@assystem.com
OFFICE OF ORIGIN : #69, 3F & Devi Jambukeshwar Arcade 4th Floor, Millers Road Bengaluru - 560 052 Tel.: 080 - 40 39 79 79 Email : bangalore@assystem.com

OWNER: BANGALORE DEVELOPMENT AUTHORITY

DATE: 17-01-2026

CONTRACTOR

DRAWN: VSK

PROJECT: CONSTRUCTION OF EIGHT LANE BENGALURU BUSINESS CORRIDOR (BBC)

PREPARED: AGA

CHECKED: MD

TITLE: GENERAL ARRANGEMENT DRAWING FOR FLYOVER FROM CH. 0+120.00 TO CH. 0+840.00 KM (SHEET 4 OF 6)

APPROVED: MD

DRG.NO.: N0533/E/MAJ/DD-003 (R1)

SCALE: AS SHOWN

DISCLAIMER: ONLY APPROVED AND SIGNED HARD COPIES SHALL BE USED FOR CONSTRUCTION

THIS DRAWING IS THE PROPERTY OF STUP CONSULTANTS Pvt. LTD. IT SHOULD NOT BE USED, COPIED, OR REPRODUCED WITHOUT THEIR WRITTEN PERMISSION.

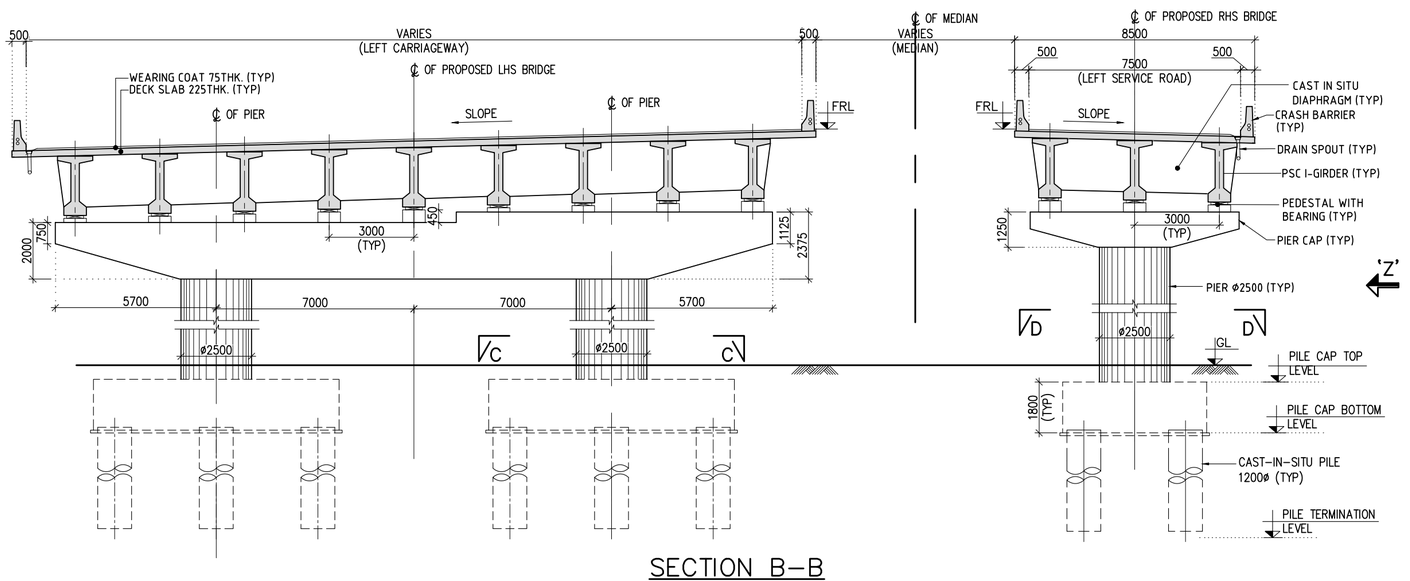

SECTION B–B
(SCALE 1:150)

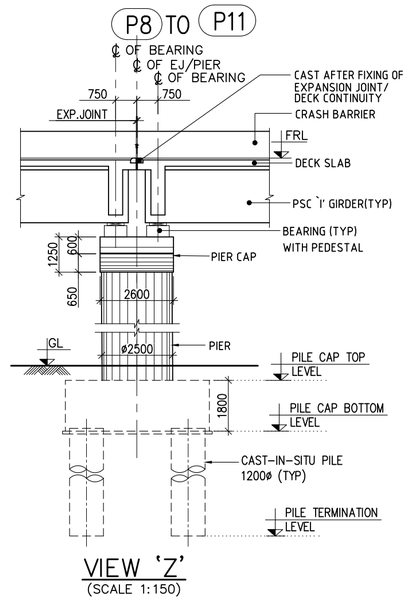

VIEW 'Z'
(SCALE 1:150)

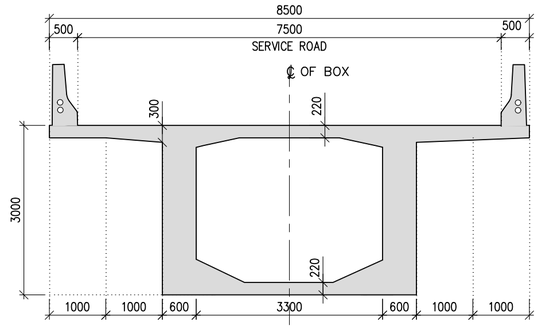

DETAIL OF BOX GIRDER FOR 50m SPAN
(SCALE 1:75)

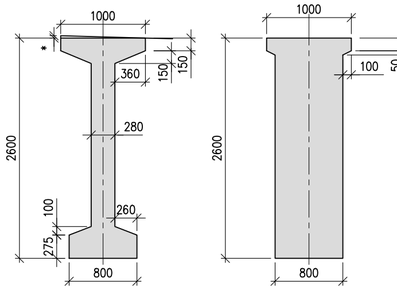

(AT MID SPAN)

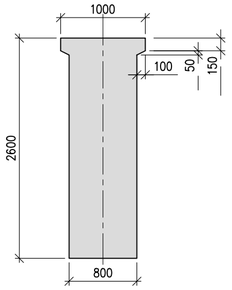

(AT SUPPORT)

DETAIL OF PRECAST PSC 'I' GIRDER FOR 40m SPAN
(SCALE 1:50)

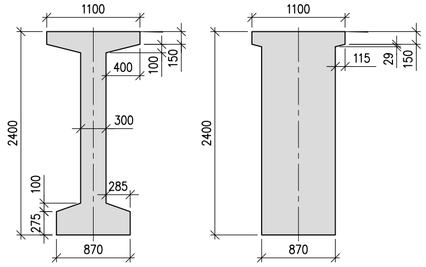

(AT MID SPAN)

(AT SUPPORT)

DETAIL OF PRECAST PSC 'I' GIRDER FOR 35m SPAN
(SCALE 1:50)

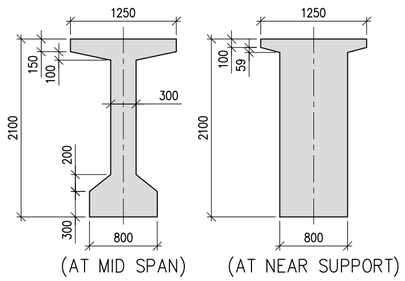

(AT MID SPAN)

(AT NEAR SUPPORT)

DETAIL OF PRECAST PSC I-GIRDER FOR 30m SPAN
(SCALE 1:50)

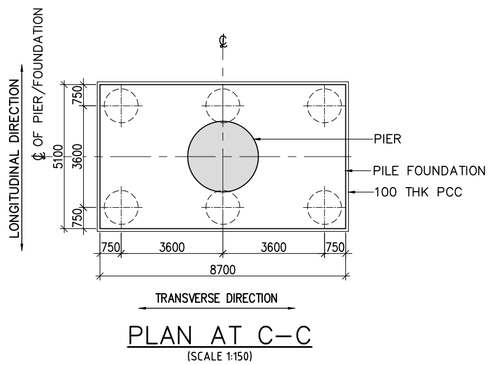

PLAN AT C–C
(SCALE 1:150)

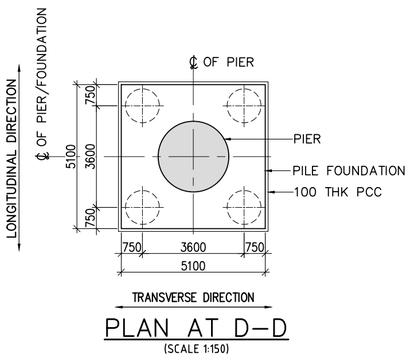

PLAN AT D–D
(SCALE 1:150)

THE DIMENSIONS SHOWN ARE FOR TENDER PURPOSE ONLY

1. ALL DIMENSIONS ARE IN MILLIMETERS, LEVELS ARE IN METERS & CHAINAGES ARE IN KILOMETERS, UNLESS MENTIONED OTHERWISE.
2. DIMENSIONS ARE NOT TO BE SCALED OFF ONLY WRITTEN DIMENSIONS ARE TO BE FOLLOWED.

REFERENCE DRAWINGS: (LATEST REVISION)

N0533/E/MAJ/DD–001 TO 003....	GENERAL ARRANGEMENT DRAWING FOR FLYOVER FROM CH. 0+120.00 Km TO CH. 0+840.00 Km (SHEET–1 OF 6 TO SHEET–5 OF 6)

DATE	No.	REVISION	DRAWN	PREPARED	CHECKED	APPROVED
27-02-2026	R1	FOR APPROVAL	VSK	AGA	MD	MD
17-01-2026	R0	FIRST SUBMISSION	VSK	AGA	MD	MD

☑ APPROVAL	☐ CONSTRUCTION		
☐ INFORMATION	☐ TENDER		
☐ DRAFT	☐ PRELIMNARY		

RELEASED FOR

GIS					
HIGHWAYS			MAJOR STRUCTURES		
ELECTRICAL			IRRIGATION/ WATER RESOURCES		
BUILDINGS			PHE / PLUMBING/ FIREFIGHTING		
ARCHITECTURE			MECHANICAL / HVAC		
CHECKED BY	SIGN	DATE	CHECKED BY	SIGN	DATE

FOR INTERNAL OFFICE ONLY

CONSULTANT: STUP Consultants Pvt. Ltd.
assystem stup
REGISTERED OFFICE : Unit. No.2702, 27th Floor, Rupa Renaissance, P.No.D–33 & D–207, Juinagar, MIDC TTC Industrial Area, Turbhe, Navi Mumbai, Thane, Maharashtra– 400705 Tel: +91 (022) 68067777, E–mail: mumbai@assystem.com
OFFICE OF ORIGIN : #59, JP & Devi Jambukeshwar Arcade 4th Floor, Millers Road Bengaluru – 560 052 Tel.: 080 – 40 39 79 79 Email : bangalore@assystem.com

OWNER: BANGALORE DEVELOPMENT AUTHORITY

CONTRACTOR:

PROJECT: CONSTRUCTION OF EIGHT LANE BENGALURU BUSINESS CORRIDOR (BBC)

TITLE: GENERAL ARRANGEMENT DRAWING FOR FLYOVER FROM CH. 0+120.00 TO CH. 0+840.00 KM (SHEET 6 OF 6)

DRG.NO.: N0533/E/MAJ/DD–004 (R1)

DATE: 17-01-2026
DRAWN: VSK
PREPARED: AGA
CHECKED: MD
APPROVED: MD
SCALE: AS SHOWN

DISCLAIMER: ONLY APPROVED AND SIGNED HARD COPIES SHALL BE USED FOR CONSTRUCTION

THIS DRAWING IS THE PROPERTY OF STUP CONSULTANTS Pvt. LTD. IT SHOULD NOT BE USED, COPIED, OR REPRODUCED WITHOUT THEIR WRITTEN PERMISSION.

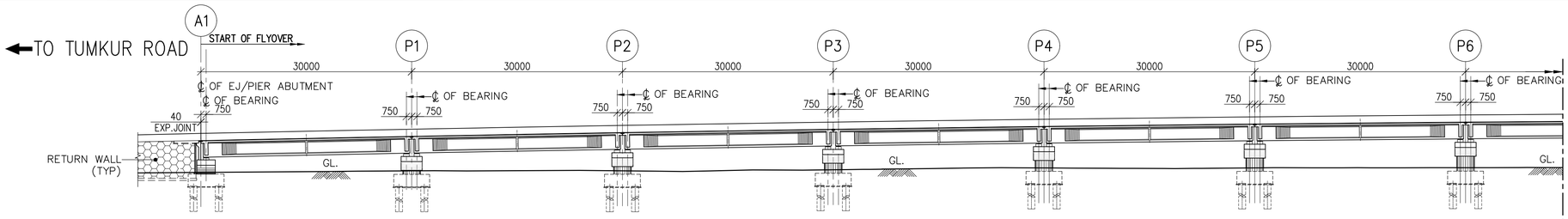

DATUM 906.000m							
PROPOSED ROAD LEVEL ON C/L (m)	928.899	929.738	930.485	931.141	931.705	932.177	932.559
BED / GROUND LEVEL ON C/L (m)	925.556	925.774	925.786	925.942	926.198	926.195	926.231
CHAINAGES (km)	14+115.4	14+145.4	14+175.4	14+205.4	14+235.4	14+265.4	14+295.4

ELEVATION SHOW AS PER CENTER LINE OF ALIGNMENT
(SCALE 1:500)

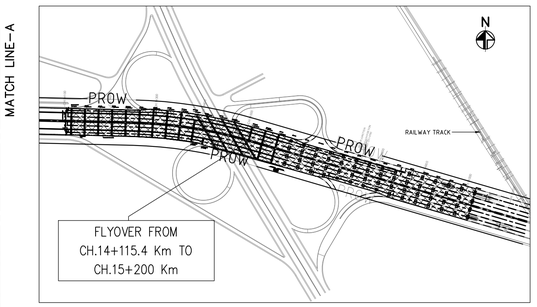

KEY PLAN
(SCALE 1:5000)

NOTES:

1. ALL THE DIMENSIONS ARE IN MILLIMETERS AND CHAINAGES ARE IN KILOMETERS
2. DIMENSIONS SHALL NOT BE SCALED OFF, ONLY WRITTEN DIMENSIONS SHALL BE FOLLOWED
3. GRADE OF CONCRETE SHALL BE FOLLOW AS:
   a) PSC SUPER STRUCTURE – M50
   b) PIER, PIER CAP & PEDESTAL – M45
   c) PILE & PILE CAP – M35
   d) CRASH BARRIER – M40
   e) APPROACH SLAB – M30
4. REINFORCEMENT SHALL BE HIGH STRENGTH DEFORMED BARS OF GRADE Fe500D CONFORMING TO IS:1786–2008 HAVING MINIMUM ELONGATION 14.5%
5. ALL BEARINGS ARE POT CUM PTFE TYPE.
6. EXPANSION JOINTS ARE WITH STRIP SEAL TYPE.
7. PERMANENT LINERS SHALL BE PROVIDED FOR PILES EXPOSED TO AGGRESSIVE SOIL.
8. DIMENSION OF STRUCTURAL MEMBERS SHOWN ARE INDICATIVE ONLY WHICH SHALL BE CONSIDERED BASED ON DETAILED DESIGN.
9. ABOVE DETAILS ARE OF TYPICAL NATURE TO INDICATE THE TYPE OF STRUCTURE AND SPACING OF STRUCTURAL MEMBER. ACTUAL CONSTRUCTION DESIGN MAY BE DIFFERENT BASED ON SITE CONDITIONS.
10. PILE CAPACITY CONSIDERED AS 375T FOR 1.2 DIA PILE OF 25M LENGTH FOR FOUNDATION DESIGN.
11. FOR CAMBER/SUPERELEVATION AND CROSS SECTION OF HIGHWAY AT SPECIFIC STRUCTURE LOCATIONS, RELEVANT TYPICAL CROSS SECTION DRAWING SHALL BE REFERRED.

LEGEND:

1) FRL – FINISHED ROAD LEVEL
2) EBL – EXISTING BED LEVEL
3) EJ – EXPANSION JOINT
4) ⊗ ▭ – POT PTFE BEARING
5) ⊗ ↑ – JACK POINT
6) TYP – TYPICAL
7) DC – DECK CONTINUES
8) GL – GROUND LEVEL

REFERENCE DRAWINGS: (LATEST REVISION)

NO533/E/MAJ/DD–014 TO 019 .... GENERAL ARRANGEMENT DRAWING FOR FLYOVER FROM CH.14+115.40 TO CH.15+020.00 Km (SHEET–2 TO 7)

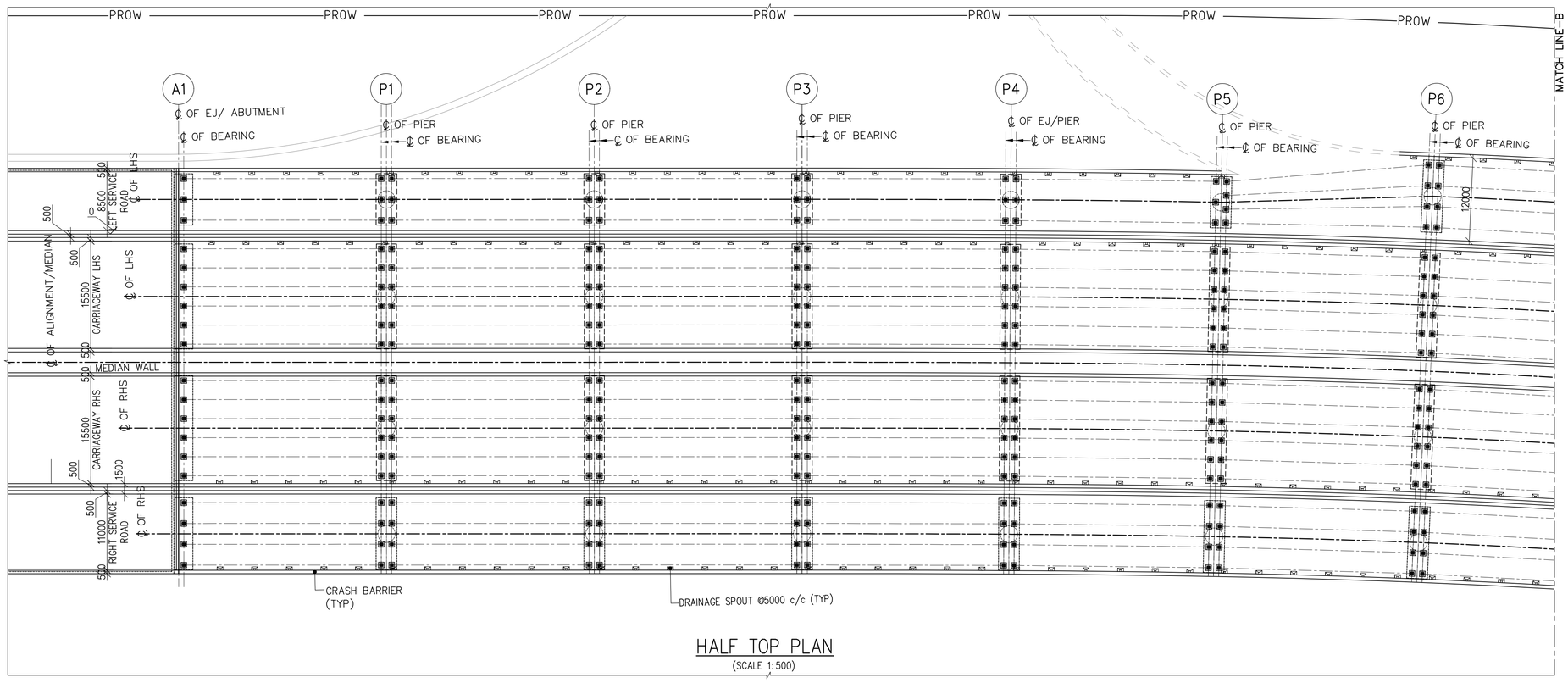

HALF TOP PLAN
(SCALE 1:500)

NOTES:

DATE	No.	REVISION	DRAWN	PREPARED	CHECKED	APPROVED
02-01-26	R0	FIRST SUBMISSION	SST	AGA	MD	MD

☑ APPROVAL ☐ CONSTRUCTION
☐ INFORMATION ☐ TENDER
☐ DRAFT ☐ PRELIMNARY

RELEASED FOR

GIS					
HIGHWAYS			MAJOR STRUCTURES		
ELECTRICAL			IRRIGATION/ WATER RESOURCES		
BUILDINGS			PHE / PLUMBING/ FIREFIGHTING		
ARCHITECTURE			MECHANICAL / HVAC		
CHECKED BY	SIGN	DATE	CHECKED BY	SIGN	DATE

FOR INTERNAL OFFICE ONLY

CONSULTANT
STUP Consultants Pvt. Ltd.
REGISTERED OFFICE : Unit No.2702, 27th Floor, Rupa Renaissance, P.No.D–33 & D–207, Juinagar, MIDC TTC Industrial Area, Turbhe, Navi Mumbai, Thane, Maharashtra–400705. Tel: +91 (022) 68067777, E–mail: mumbai@assystem.com
OFFICE OF ORIGIN : #69, JF & Devi Jambukeshwar Arcade 4th Floor, Millers Road Bengaluru – 560 052 Tel.: 080 – 40 39 79 79 Email : bangalore@assystem.com

OWNER: BANGALORE DEVELOPMENT AUTHORITY

CONTRACTOR

PROJECT: CONSTRUCTION OF EIGHT LANE BENGALURU BUSINESS CORRIDOR (BBC)

TITLE: GENERAL ARRANGEMENT DRAWING FOR FLYOVER FROM CH. 14+115.40 TO CH. 15+020.00 KM (SHEET–1 OF 7)

DRG.NO.: NO533/E/MAJ/DD–013 (R0)

DATE	DRAWN	PREPARED	CHECKED	APPROVED	SCALE
02-01-2026	SST	AGA	MD	MD	AS SHOWN

DISCLAIMER: ONLY APPROVED AND SIGNED HARD COPIES SHALL BE USED FOR CONSTRUCTION

THIS DRAWING IS THE PROPERTY OF STUP CONSULTANTS Pvt. LTD. IT SHOULD NOT BE USED, COPIED, OR REPRODUCED WITHOUT THEIR WRITTEN PERMISSION.

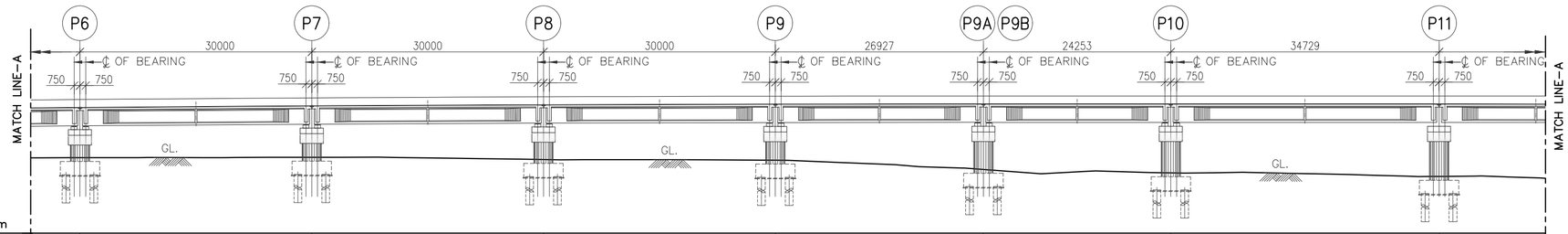

DATUM 906.000m								
PROPOSED ROAD LEVEL ON C/L (m)	932.559	932.848	933.045	933.152	933.173	933.173	933.173	
BED / GROUND LEVEL ON C/L (m)	926.231	926.274	926.013	925.844	924.720	924.270	923.811	
CHAINAGES (km)	14+295.4	14+325.4	14+355.4	14+385.4	14+412.327	14+436.58	14+471.31	

ELEVATION SHOW AS PER CENTER LINE OF ALIGNMENT

(SCALE 1:500)

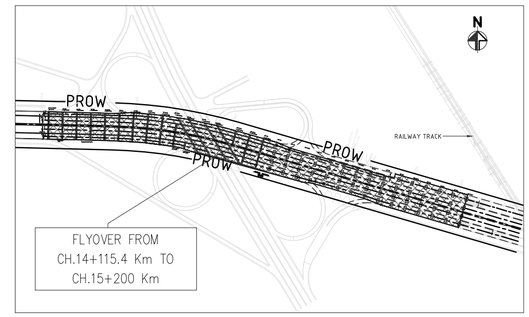

KEY PLAN

(SCALE 1:5000)

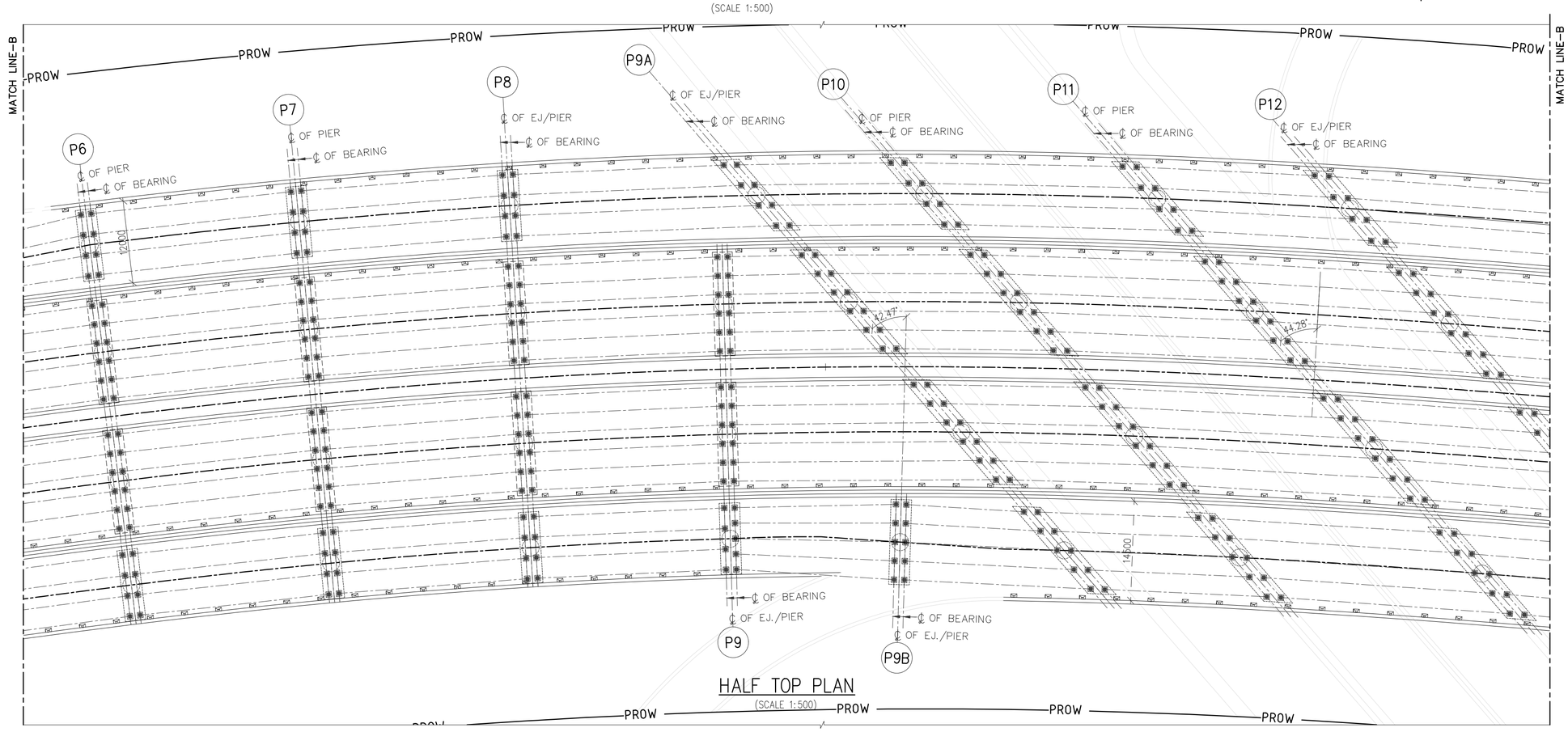

NOTES:

1. ALL DIMENSIONS ARE IN MILLIMETERS, LEVELS ARE IN METERS & CHAINAGES ARE IN KILOMETERS, UNLESS MENTIONED OTHERWISE.
2. DIMENSIONS ARE NOT TO BE SCALED OFF ONLY WRITTEN DIMENSIONS ARE TO BE FOLLOWED.

REFERENCE DRAWINGS: (LATEST REVISION)

N0533/E/MAJ/DD-013....	GENERAL ARRANGEMENT DRAWING FOR FLYOVER FROM CH.14+115.40 TO CH.15+020.00 Km (SHEET-1 OF 7)
N0533/E/MAJ/DD-015 TO 019	GENERAL ARRANGEMENT DRAWING FOR FLYOVER FROM CH.14+115.40 TO CH.15+020.00 Km (SHEET-3 TO 7 OF 7)

DATE	No.	REVISION	DRAWN	PREPARED	CHECKED	APPROVED
02-01-26	R0	FIRST SUBMISSION	SST	AGA	MD	MD

☑ APPROVAL ☐ CONSTRUCTION
☐ INFORMATION ☐ TENDER
☐ DRAFT ☐ PRELIMINARY

RELEASED FOR

GIS					
HIGHWAYS			MAJOR STRUCTURES		
ELECTRICAL			IRRIGATION/ WATER RESOURCES		
BUILDINGS			PHE / PLUMBING/ FIREFIGHTING		
ARCHITECTURE			MECHANICAL / HVAC		
CHECKED BY	SIGN	DATE	CHECKED BY	SIGN	DATE

FOR INTERNAL OFFICE ONLY

CONSULTANT
STUP Consultants Pvt. Ltd.
REGISTERED OFFICE : Unit No.2702, 27th Floor, Rupa Renaissance, P.No.D-33 & D-207, Juinagar, MIDC TTC Industrial Area, Turbhe, Navi Mumbai, Thane, Maharashtra-400705. Tel: +91 (022) 68067777. E-mail: mumbai@assystem.com
OFFICE OF ORIGIN : #69, JP & Devi Jambukeshwar Arcade 4th Floor, Millers Road Bengaluru – 560 052 Tel.: 080 – 40 39 79 79 Email : bangalore@assystem.com

OWNER: BANGALORE DEVELOPMENT AUTHORITY

DATE: 02-01-2026

CONTRACTOR

DRAWN: SST

PROJECT: CONSTRUCTION OF EIGHT LANE BENGALURU BUSINESS CORRIDOR (BBC)

PREPARED: AGA

CHECKED: MD

TITLE: GENERAL ARRANGEMENT DRAWING FOR FLYOVE FROM CH.14+115.40 TO CH.15+020.00 Km (SHEET-2 OF 7)

APPROVED: MD

DRG.NO.: N0533/E/MAJ/DD-014 (R0)

SCALE: AS SHOWN

DISCLAIMER: ONLY APPROVED AND SIGNED HARD COPIES SHALL BE USED FOR CONSTRUCTION

THIS DRAWING IS THE PROPERTY OF STUP CONSULTANTS Pvt. LTD. IT SHOULD NOT BE USED, COPIED, OR REPRODUCED WITHOUT THEIR WRITTEN PERMISSION.

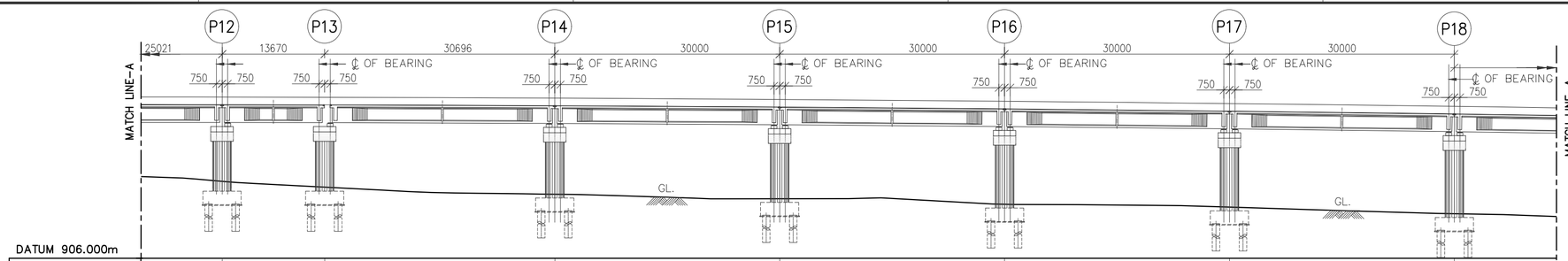

DATUM 906.000m							
PROPOSED ROAD LEVEL ON C/L (m)	933.156	933.129	933.02	932.846	932.606	932.299	931.927
BED / GROUND LEVEL ON C/L (m)	922.922	922.142	921.212	920.607	919.875	919.506	918.618
CHAINAGES (km)	14+496.33	14+510	14+540	14+570	14+600	14+630	14+660

ELEVATION SHOW AS PER CENTER LINE OF ALIGNMENT
(SCALE 1:500)

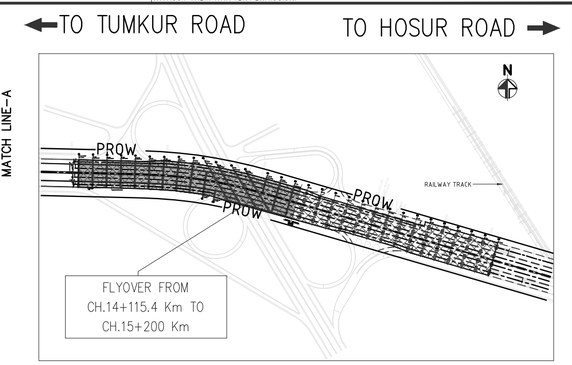

KEY PLAN
(SCALE 1:5000)

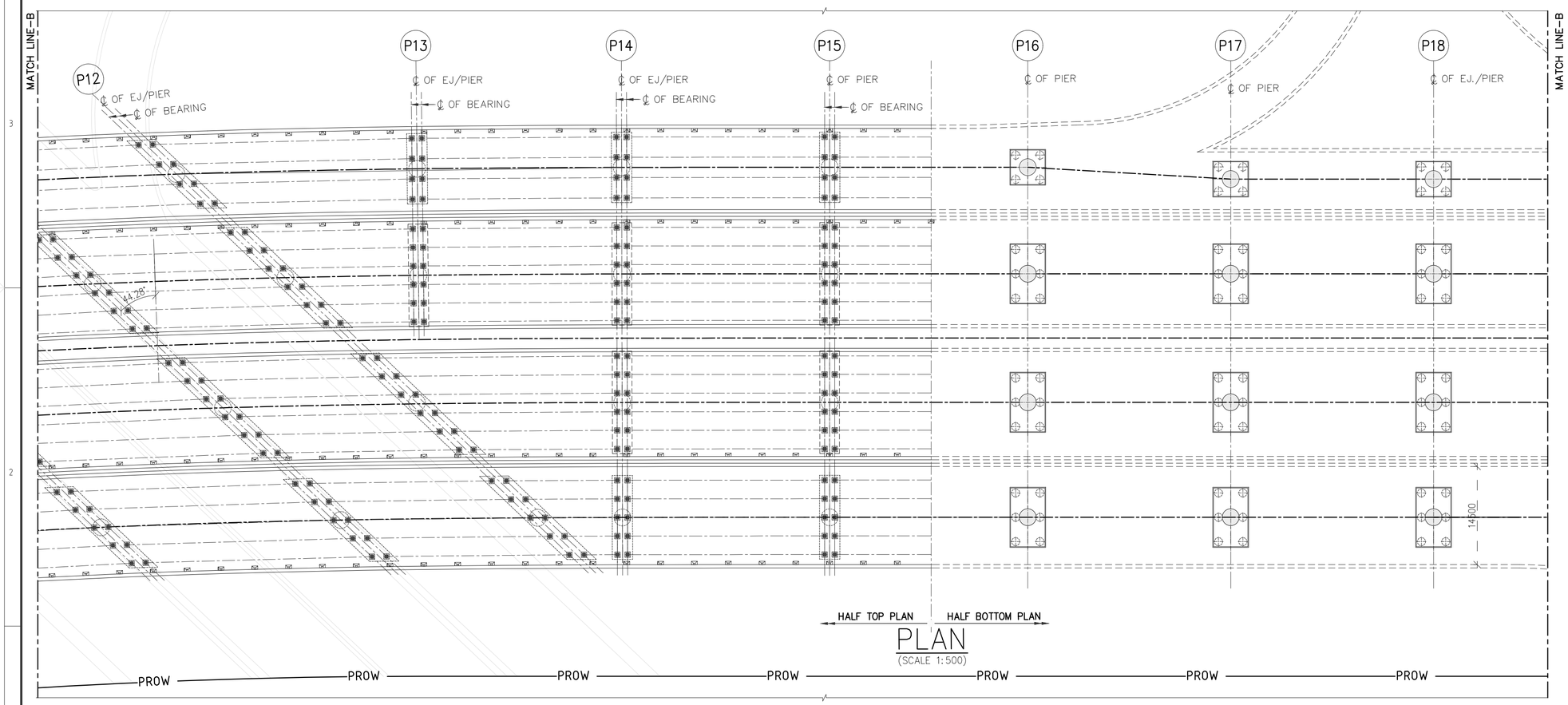

PLAN
(SCALE 1:500)

NOTES:

1. ALL DIMENSIONS ARE IN MILLIMETERS, LEVELS ARE IN METERS & CHAINAGES ARE IN KILOMETERS, UNLESS MENTIONED OTHERWISE.
2. DIMENSIONS ARE NOT TO BE SCALED OFF ONLY WRITTEN DIMENSIONS ARE TO BE FOLLOWED.

REFERENCE DRAWINGS: (LATEST REVISION)

N0533/E/MAJ/DD-013 & 014.... GENERAL ARRANGEMENT DRAWING FOR FLYOVER FROM CH.14+115.40 TO CH.15+020.00 Km (SHEET-1 TO 2 OF 7)

N0533/E/MAJ/DD-016 TO 019 .... GENERAL ARRANGEMENT DRAWING FOR FLYOVER FROM CH.14+115.40 TO CH.15+020.00 Km SHEET-4 TO 7 OF 7)

DATE	No.	REVISION	DRAWN	PREPARED	CHECKED	APPROVED
02-01-26	R0	FIRST SUBMISSION	SST	AGA	MD	MD

☑ APPROVAL ☐ CONSTRUCTION
☐ INFORMATION ☐ TENDER
☐ DRAFT ☐ PRELIMNARY

RELEASED FOR

GIS					
HIGHWAYS			MAJOR STRUCTURES		
ELECTRICAL			IRRIGATION/ WATER RESOURCES		
BUILDINGS			PHE / PLUMBING/ FIREFIGHTING		
ARCHITECTURE			MECHANICAL / HVAC		
CHECKED BY	SIGN	DATE	CHECKED BY	SIGN	DATE

FOR INTERNAL OFFICE ONLY

CONSULTANT
STUP Consultants Pvt. Ltd.
REGISTERED OFFICE : Unit No.2702, 27th Floor, Rupa Renaissance, P.No.D-33 & D-207, Juinagar, MIDC TTC Industrial Area, Turbhe, Navi Mumbai, Thane, Maharashtra-400705. Tel: +91 (022) 68067777, E-mail: mumbai@assystem.com
OFFICE OF ORIGIN : #69, JP & Devi Jambukeshwar Arcade 4th Floor, Millers Road Bengaluru – 560 052 Tel.: 080 – 40 39 79 79 Email : bangalore@assystem.com

OWNER: BANGALORE DEVELOPMENT AUTHORITY

CONTRACTOR

PROJECT: CONSTRUCTION OF EIGHT LANE BENGALURU BUSINESS CORRIDOR (BBC)

TITLE: GENERAL ARRANGEMENT DRAWING FOR FLYOVER FROM CH.14+115.40 TO CH.15+020.00 Km (SHEET-3 OF 7)

DRG.NO.: N0533/E/MAJ/DD-013 (R0)

DATE: 02-01-2026
DRAWN: SST
PREPARED: AGA
CHECKED: MD
APPROVED: MD
SCALE: AS SHOWN

DISCLAIMER: ONLY APPROVED AND SIGNED HARD COPIES SHALL BE USED FOR CONSTRUCTION

THIS DRAWING IS THE PROPERTY OF STUP CONSULTANTS Pvt. LTD. IT SHOULD NOT BE USED, COPIED, OR REPRODUCED WITHOUT THEIR WRITTEN PERMISSION.

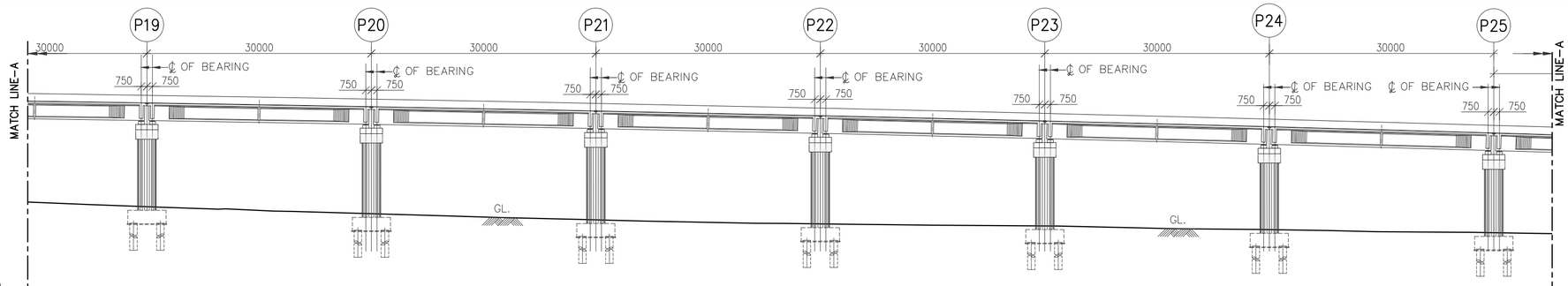

DATUM 906.000m													
PROPOSED ROAD LEVEL ON C/L (m)	931.489		930.985		930.416		929.78		929.078		928.311		927.477
BED / GROUND LEVEL ON C/L (m)	917.623		916.68		915.854		915.3		915.026		914.53		914.13
CHAINAGES (km)	14+690		14+720		14+750		14+780		14+810		14+840		14+870

ELEVATION SHOW AS PER CENTER LINE OF ALIGNMENT
(SCALE 1:500)

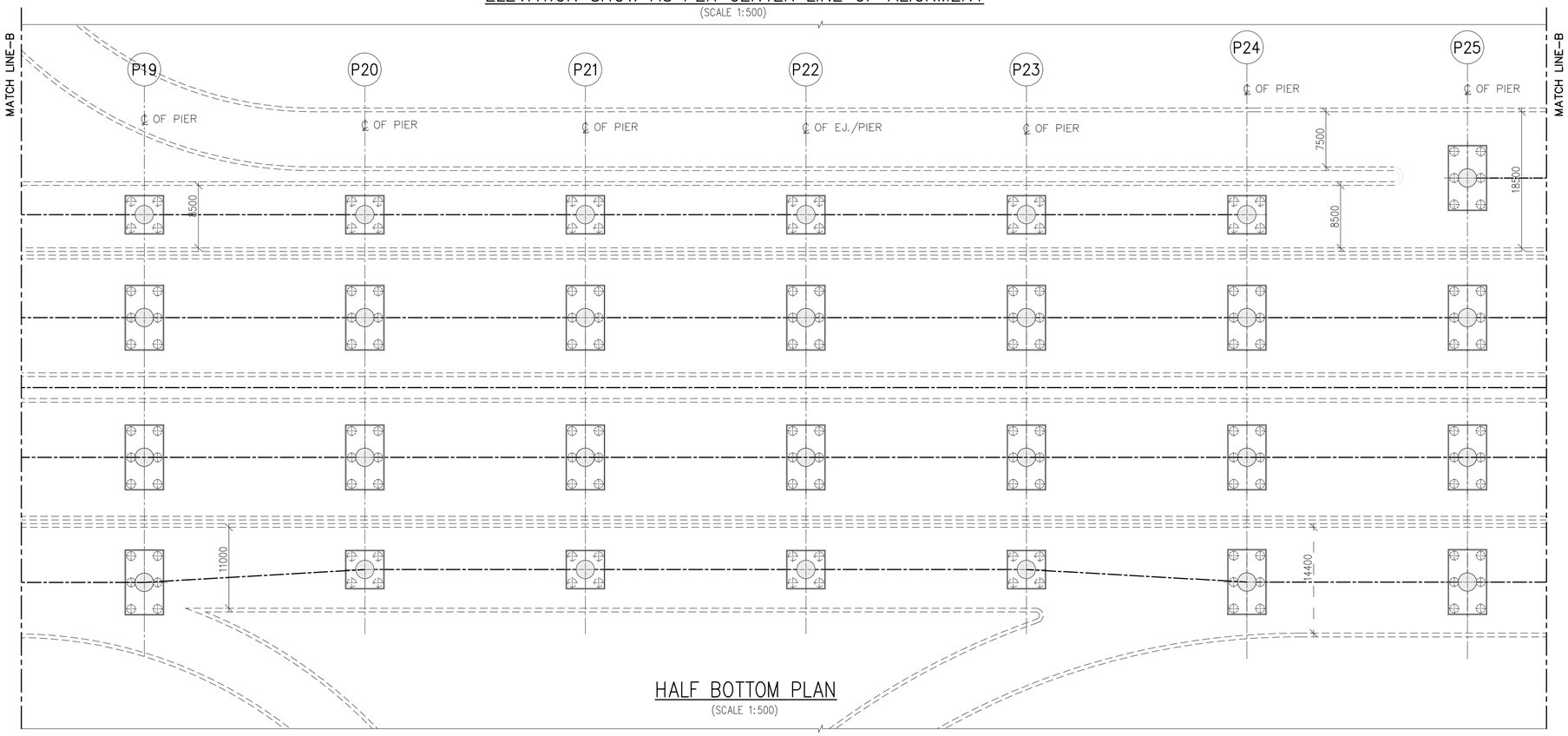

HALF BOTTOM PLAN
(SCALE 1:500)

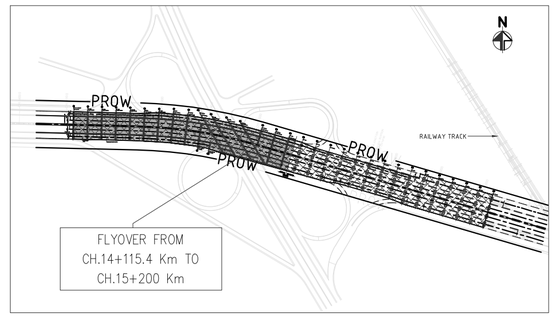

KEY PLAN
(SCALE 1:5000)

NOTES:

1. ALL DIMENSIONS ARE IN MILLIMETERS, LEVELS ARE IN METERS & CHAINAGES ARE IN KILOMETERS, UNLESS MENTIONED OTHERWISE.
2. DIMENSIONS ARE NOT TO BE SCALED OFF ONLY WRITTEN DIMENSIONS ARE TO BE FOLLOWED.

REFERENCE DRAWINGS: (LATEST REVISION)

N0533/E/MAJ/DD-013 TO 015 .... GENERAL ARRANGEMENT DRAWING FOR FLYOVER FROM CH.14+115.40 TO CH.15+020.00 Km (SHEET-1 TO 3 OF 7)

N0533/E/MAJ/DD-017 TO 019 .... GENERAL ARRANGEMENT DRAWING FOR FLYOVER FROM CH.14+115.40 TO CH.15+020.00 Km (SHEET-5 TO 7 OF 7)

DATE	No.	REVISION	DRAWN	PREPARED	CHECKED	APPROVED
02-01-26	R0	FIRST SUBMISSION	SST	AGA	MD	MD

☑ APPROVAL ☐ CONSTRUCTION
☐ INFORMATION ☐ TENDER
☐ DRAFT ☐ PRELIMNARY

RELEASED FOR

GIS					
HIGHWAYS			MAJOR STRUCTURES		
ELECTRICAL			IRRIGATION/ WATER RESOURCES		
BUILDINGS			PHE / PLUMBING/ FIREFIGHTING		
ARCHITECTURE			MECHANICAL / HVAC		
CHECKED BY	SIGN	DATE	CHECKED BY	SIGN	DATE

FOR INTERNAL OFFICE ONLY

CONSULTANT
STUP Consultants Pvt. Ltd.
REGISTERED OFFICE : Unit No.2702, 27th Floor, Rupa Renaissance, P.No.D-33 & D-207, Juinagar, MIDC TTC Industrial Area, Turbhe, Navi Mumbai, Thane, Maharashtra-400705. Tel: +91 (022) 68067777, E-mail: mumbai@assystem.com
OFFICE OF ORIGIN : #69, JP & Devi Jambukeshwar Arcade 4th Floor, Millers Road Bengaluru - 560 052 Tel.: 080 - 40 39 79 79 Email : bangalore@assystem.com

OWNER: BANGALORE DEVELOPMENT AUTHORITY

CONTRACTOR

PROJECT: CONSTRUCTION OF EIGHT LANE BENGALURU BUSINESS CORRIDOR (BBC)

TITLE: GENERAL ARRANGEMENT DRAWING FOR FLYOVER FROM CH. 14+115.40 TO CH. 15+020.00 KM (SHEET-4 OF 7)

DRG.NO.: N0533/E/MAJ/DD-016 (R0)

DATE: 02-01-2026
DRAWN: SST
PREPARED: AGA
CHECKED: MD
APPROVED: MD
SCALE: AS SHOWN

DISCLAIMER: ONLY APPROVED AND SIGNED HARD COPIES SHALL BE USED FOR CONSTRUCTION

THIS DRAWING IS THE PROPERTY OF STUP CONSULTANTS Pvt. LTD. IT SHOULD NOT BE USED, COPIED, OR REPRODUCED WITHOUT THEIR WRITTEN PERMISSION.

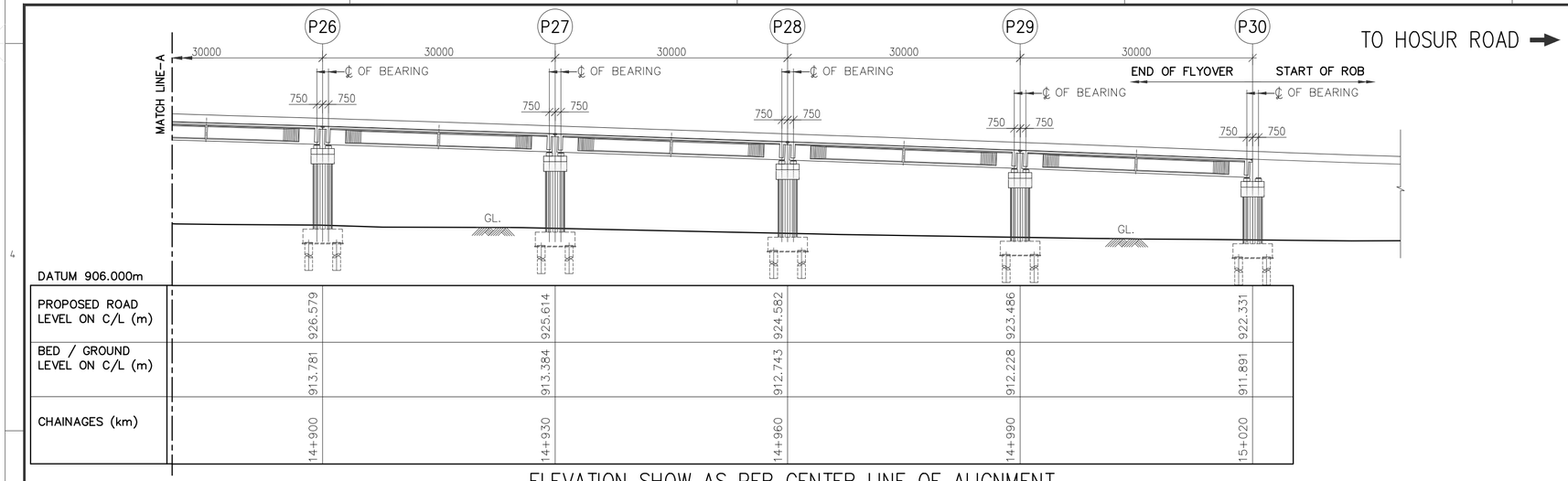

DATUM 906.000m

PROPOSED ROAD LEVEL ON C/L (m)	926.579	925.614	924.582	923.486	922.331
BED / GROUND LEVEL ON C/L (m)	913.781	913.384	912.743	912.228	911.891
CHAINAGES (km)	14+900	14+930	14+960	14+990	15+020

ELEVATION SHOW AS PER CENTER LINE OF ALIGNMENT

(SCALE 1:500)

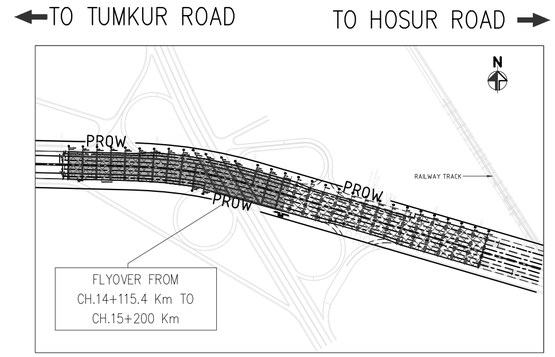

KEY PLAN

(SCALE 1:5000)

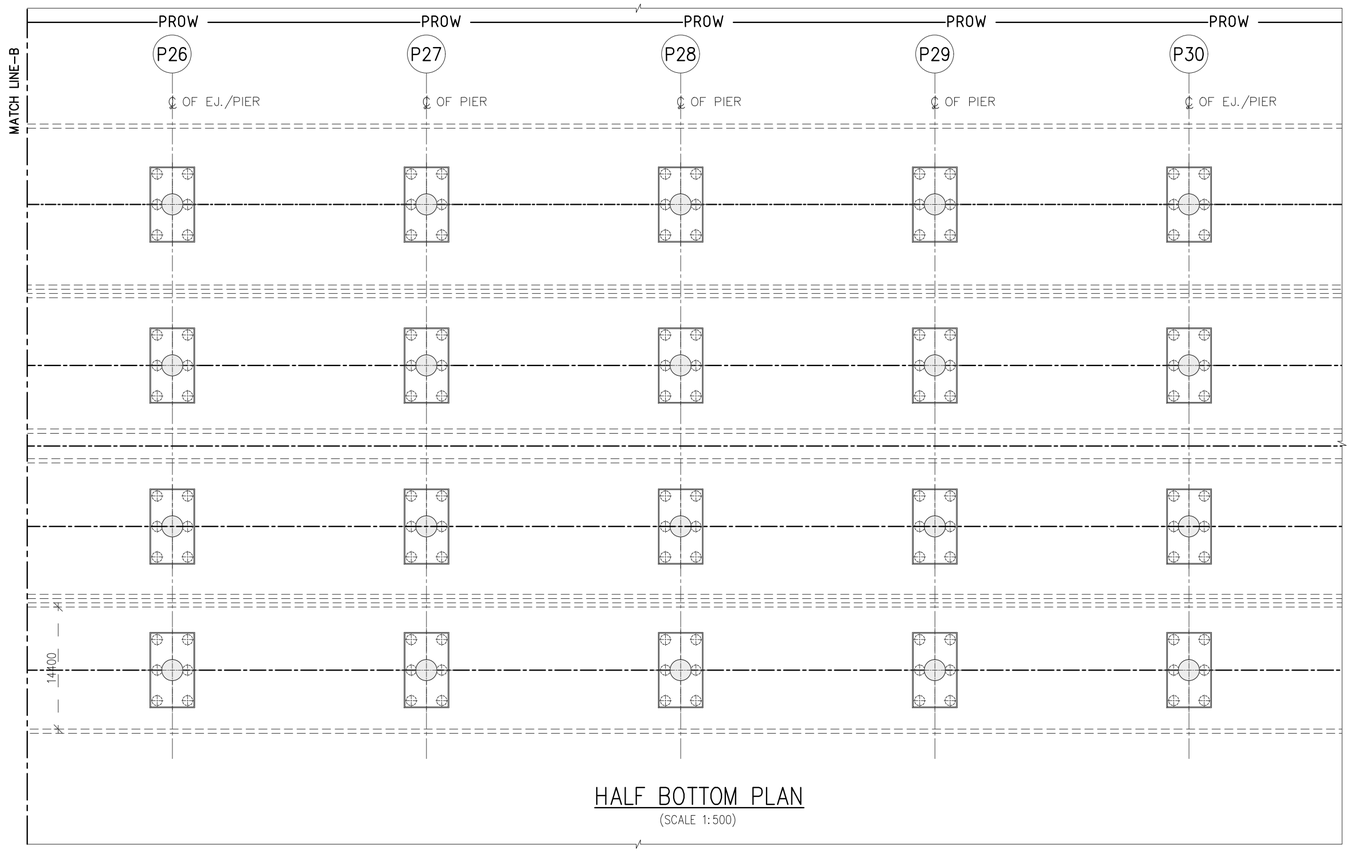

HALF BOTTOM PLAN

(SCALE 1:500)

NOTES:

1. ALL DIMENSIONS ARE IN MILLIMETERS, LEVELS ARE IN METERS & CHAINAGES ARE IN KILOMETERS, UNLESS MENTIONED OTHERWISE.
2. DIMENSIONS ARE NOT TO BE SCALED OFF ONLY WRITTEN DIMENSIONS ARE TO BE FOLLOWED.

REFERENCE DRAWINGS: (LATEST REVISION)

N0533/E/MAJ/DD-013 TO 016.... GENERAL ARRANGEMENT DRAWING FOR FLYOVER FROM CH.14+115.40 TO CH.15+020.00 Km (SHEET-1 TO 4 OF 7)

N0533/E/MAJ/DD-018 & 019.... GENERAL ARRANGEMENT DRAWING FOR FLYOVER FROM CH.14+115.40 TO CH.15+020.00 Km (SHEET-6 OF 7 & SHEET-7 OF 7)

DATE	No.	REVISION	DRAWN	PREPARED	CHECKED	APPROVED
02-01-26	R0	FIRST SUBMISSION	SST	AGA	MD	MD

☑ APPROVAL ☐ CONSTRUCTION
☐ INFORMATION ☐ TENDER
☐ DRAFT ☐ PRELIMNARY

RELEASED FOR

GIS						
HIGHWAYS			MAJOR STRUCTURES			
ELECTRICAL			IRRIGATION/ WATER RESOURCES			
BUILDINGS			PHE / PLUMBING/ FIREFIGHTING			
ARCHITECTURE			MECHANICAL / HVAC			
CHECKED BY	SIGN	DATE	CHECKED BY	SIGN	DATE	

FOR INTERNAL OFFICE ONLY

CONSULTANT
STUP Consultants Pvt. Ltd.
assystem stup
REGISTERED OFFICE : Unit No.2702, 27th Floor, Rupa Renaissance, P.No.D-33 & D-207, Juinagar, MIDC TTC Industrial Area, Turbhe, Navi Mumbai, Thane, Maharashtra-400705. Tel: +91 (022) 68067777, E-mail: mumbai@assystem.com
OFFICE OF ORIGIN : #69, JP & Devi Jambukeshwar Arcade 4th Floor, Millers Road Bengaluru - 560 052 Tel.: 080 - 40 39 79 79 Email : bangalore@assystem.com

OWNER: BANGALORE DEVELOPMENT AUTHORITY

DATE: 02-01-2026

CONTRACTOR

DRAWN: SST

PROJECT: CONSTRUCTION OF EIGHT LANE BENGALURU BUSINESS CORRIDOR (BBC)

PREPARED: AGA

CHECKED: MD

TITLE: GENERAL ARRANGEMENT DRAWING FOR FLYOVER FROM CH.14+115.40 TO CH.15+020.00 Km (SHEET-5 OF 7)

APPROVED: MD

DRG.NO.: N0533/E/MAJ/DD-017 (R0)

SCALE: AS SHOWN

DISCLAIMER: ONLY APPROVED AND SIGNED HARD COPIES SHALL BE USED FOR CONSTRUCTION

THIS DRAWING IS THE PROPERTY OF STUP CONSULTANTS Pvt. LTD. IT SHOULD NOT BE USED, COPIED, OR REPRODUCED WITHOUT THEIR WRITTEN PERMISSION.

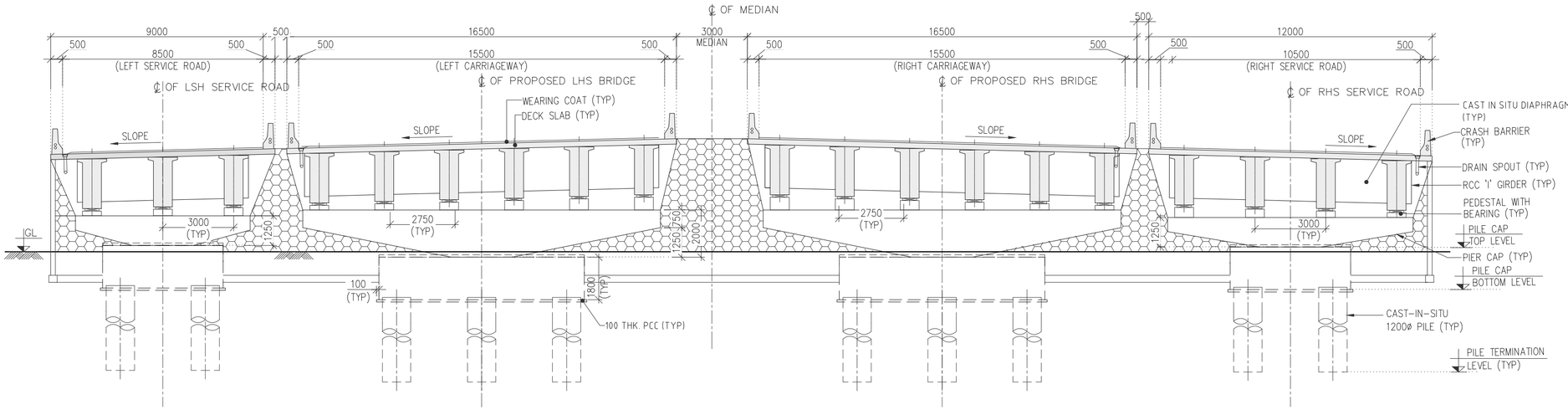

TYPICAL CROSS SECTION AT ABUTMENT PIER
(SCALE 1:150)

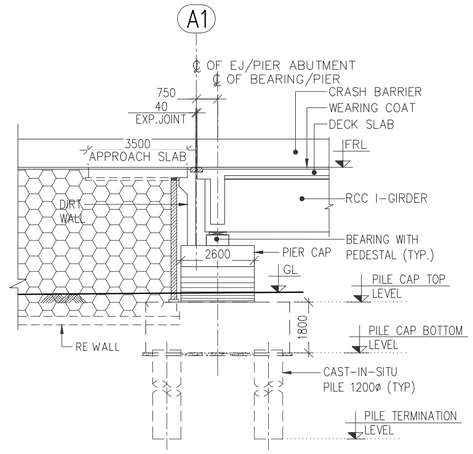

ELEVATION OF ABUTMENT
(SCALE 1:150)

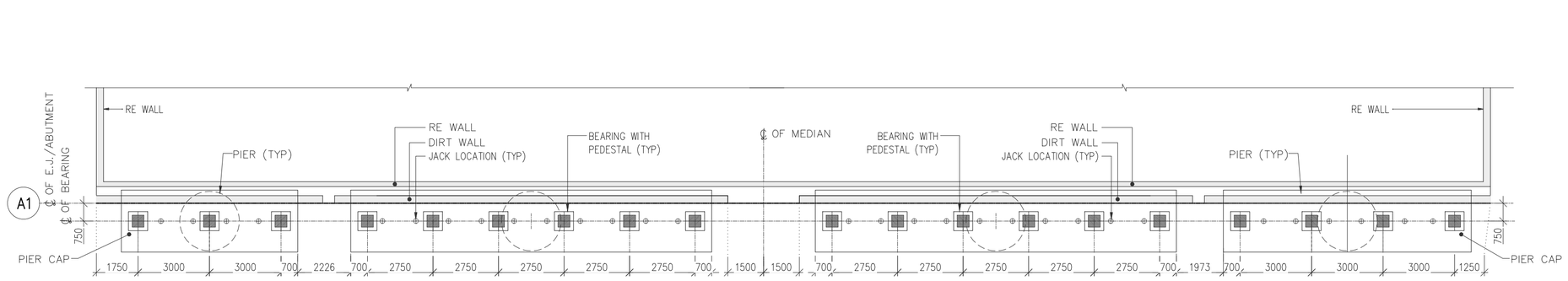

DETAILS OF RHS ABUTMENT PIER CAP
(SCALE 1:150)

DETAILS OF LHS ABUTMENT PIER CAP
(SCALE 1:150)

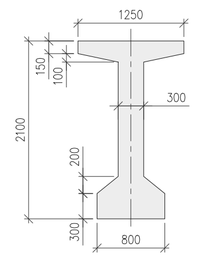

DETAIL OF PRECAST PSC GIRDER
(AT MID SPAN)
(SCALE 1:50)

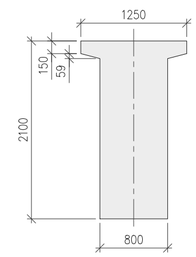

DETAIL OF PRECAST PSC GIRDER
(AT NEAR SUPPORT)
(SCALE 1:50)

THE DIMENSIONS SHOWN ARE FOR TENDER PURPOSE ONLY

NOTES:

1. ALL DIMENSIONS ARE IN MILLIMETERS, LEVELS ARE IN METERS & CHAINAGES ARE IN KILOMETERS, UNLESS MENTIONED OTHERWISE.
2. DIMENSIONS ARE NOT TO BE SCALED OFF ONLY WRITTEN DIMENSIONS ARE TO BE FOLLOWED.

REFERENCE DRAWINGS: (LATEST REVISION)

N0533/E/MAJ/DD-013 TO 017 .... GENERAL ARRANGEMENT DRAWING FOR FLYOVER FROM CH.14+115.40 TO CH.15+020.00 Km (SHEET-1 TO 5 OF 7)

N0533/E/MAJ/DD-019 .... GENERAL ARRANGEMENT DRAWING FOR FLYOVER FROM CH.14+115.40 TO CH.15+020.00 Km (SHEET-7 OF 7)

DATE	No.	REVISION	DRAWN	PREPARED	CHECKED	APPROVED
02-01-26	R0	FIRST SUBMISSION	SST	AGA	MD	MD

☑ APPROVAL	☐ CONSTRUCTION					
☐ INFORMATION	☐ TENDER					
☐ DRAFT	☐ PRELIMNARY					
RELEASED FOR						
GIS			MAJOR STRUCTURES			
HIGHWAYS			IRRIGATION/ WATER RESOURCES			
ELECTRICAL			PHE / PLUMBING/ FIREFIGHTING			
BUILDINGS			MECHANICAL / HVAC			
ARCHITECTURE						
CHECKED BY	SIGN	DATE	CHECKED BY	SIGN	DATE	
FOR INTERNAL OFFICE ONLY						

CONSULTANT
STUP Consultants Pvt. Ltd.
REGISTERED OFFICE : Unit. No.2702, 27th Floor, Rupa Renaissance, P.No.D-33 & D-207, Juinagar, MIDC TTC Industrial Area, Turbhe, Navi Mumbai, Thane, Maharashtra-400705 Tel: +91 (022) 68067777, E-mail: mumbai@assystem.com
OFFICE OF ORIGIN : #93, JP & Devi Jambukeshwar Arcade 4th Floor, Millers Road Bengaluru - 560 052 Tel.: 080 - 40 39 79 79 Email : bangalore@assystem.com

OWNER: BANGALORE DEVELOPMENT AUTHORITY

CONTRACTOR

PROJECT: CONSTRUCTION OF EIGHT LANE BENGALURU BUSINESS CORRIDOR (BBC)

TITLE: GENERAL ARRANGEMENT DRAWING FOR FLYOVER FROM CH.14+115.40 TO CH.15+020.00 Km (SHEET-6 OF 7)

DRG.NO.: N0533/E/MAJ/DD-018 (R0)

DATE: 02-01-2026
DRAWN: SST
PREPARED: AGA
CHECKED: MD
APPROVED: MD
SCALE: AS SHOWN

DISCLAIMER: ONLY APPROVED AND SIGNED HARD COPIES SHALL BE USED FOR CONSTRUCTION

THIS DRAWING IS THE PROPERTY OF STUP CONSULTANTS Pvt. LTD. IT SHOULD NOT BE USED, COPIED, OR REPRODUCED WITHOUT THEIR WRITTEN PERMISSION.

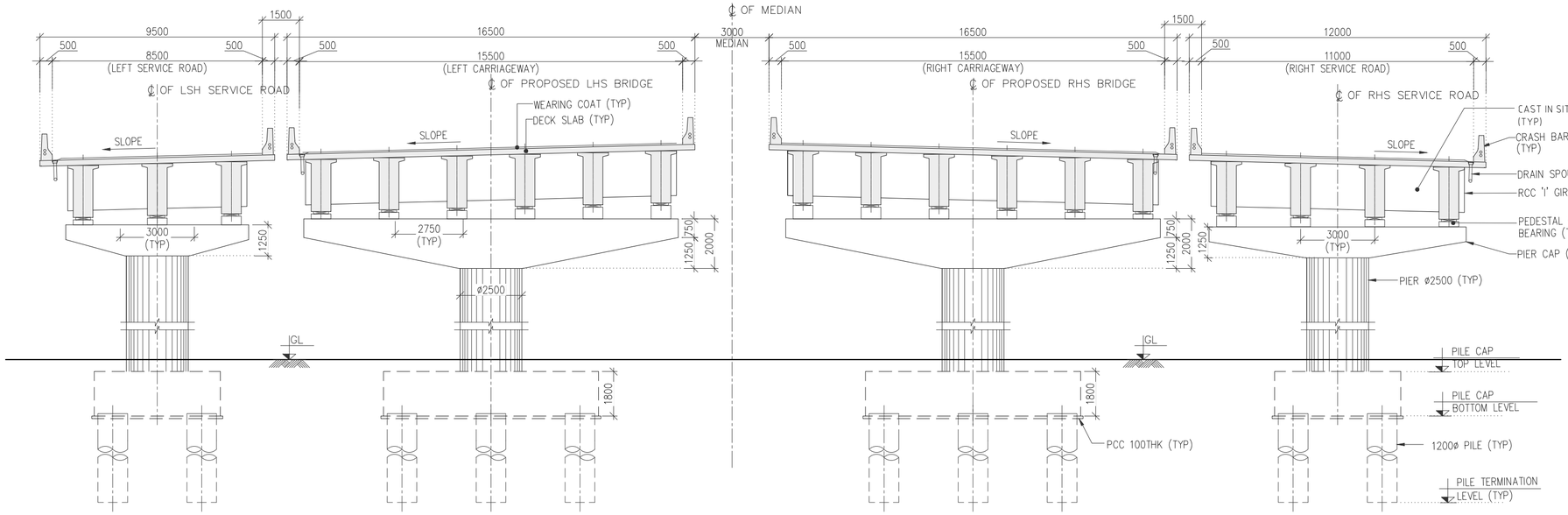

TYPICAL CROSS SECTION AT PIER

(SCALE 1:150)

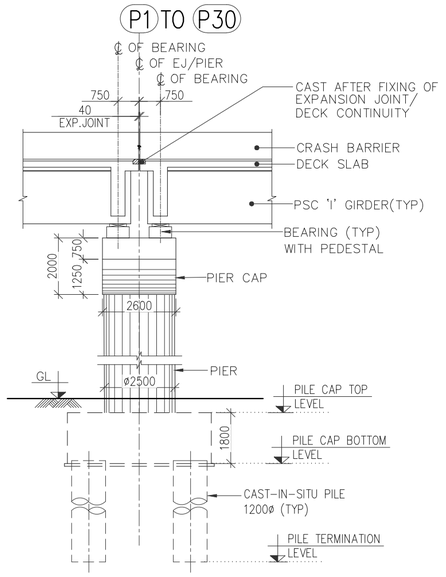

VIEW 'Y'

(SCALE 1:150)

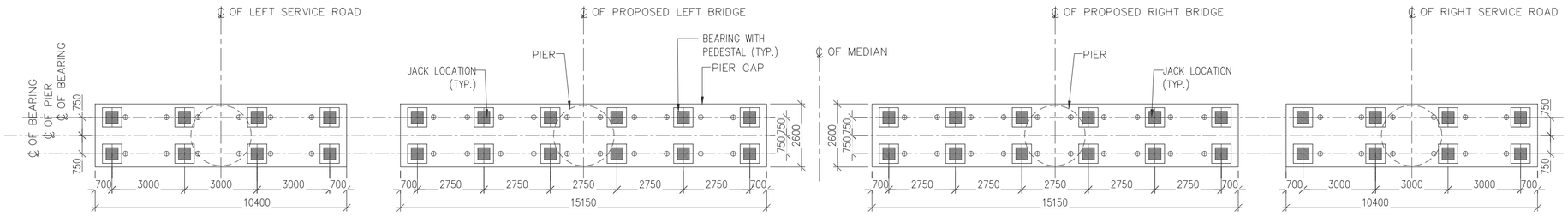

TYPICAL DETAILS OF PIER CAP

(SCALE 1:150)

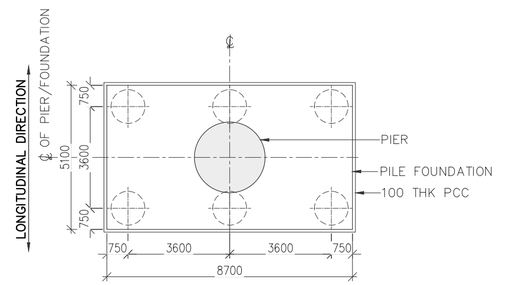

PLAN AT B–B

(SCALE 1:150)

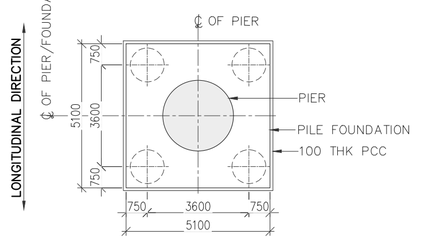

PLAN AT C–C

(SCALE 1:150)

THE DIMENSIONS SHOWN ARE FOR TENDER PURPOSE ONLY

NOTES:

1. ALL DIMENSIONS ARE IN MILLIMETERS, LEVELS ARE IN METERS & CHAINAGES ARE IN KILOMETERS, UNLESS MENTIONED OTHERWISE.
2. DIMENSIONS ARE NOT TO BE SCALED OFF ONLY WRITTEN DIMENSIONS ARE TO BE FOLLOWED.

REFERENCE DRAWINGS: (LATEST REVISION)

NO533/E/MAJ/DD–013 TO 018 .... GENERAL ARRANGEMENT DRAWING FOR FLYOVER FROM CH.14+115.40 TO CH.15+020.00 Km (SHEET–1 TO 6 OF 7)

DATE	No.	REVISION	DRAWN	PREPARED	CHECKED	APPROVED
02-01-26	R0	FIRST SUBMISSION	SST	AGA	MD	MD

☑ APPROVAL ☐ CONSTRUCTION
☐ INFORMATION ☐ TENDER
☐ DRAFT ☐ PRELIMNARY

RELEASED FOR

GIS					
HIGHWAYS			MAJOR STRUCTURES		
ELECTRICAL			IRRIGATION/ WATER RESOURCES		
BUILDINGS			PHE / PLUMBING/ FIREFIGHTING		
ARCHITECTURE			MECHANICAL / HVAC		
CHECKED BY	SIGN	DATE	CHECKED BY	SIGN	DATE

FOR INTERNAL OFFICE ONLY

CONSULTANT
STUP Consultants Pvt. Ltd.
REGISTERED OFFICE : Unit No.2702, 27th Floor, Rupa Renaissance, P.No.D–33 & D–207, Juinagar, MIDC TTC Industrial Area, Turbhe, Navi Mumbai, Thane, Maharashtra–400705. Tel: +91 (022) 68067777, E–mail: mumbai@assystem.com
OFFICE OF ORIGIN : #69, JP & Devi Jambukeshwar Arcade 4th Floor, Millers Road Bengaluru – 560 052 Tel.: 080 – 40 39 79 79 Email : bangalore@assystem.com

OWNER: BANGALORE DEVELOPMENT AUTHORITY

DATE: 02-01-2026

CONTRACTOR

DRAWN: SST

PROJECT: CONSTRUCTION OF EIGHT LANE BENGALURU BUSINESS CORRIDOR (BBC)

PREPARED: AGA

CHECKED: MD

TITLE: GENERAL ARRANGEMENT DRAWING FOR FLYOVER FROM CH.14+115.40 TO CH.15+020.00 Km (SHEET–7 OF 7)

APPROVED: MD

DRG.NO.: NO533/E/MAJ/DD–019 (R0)

SCALE: AS SHOWN

DISCLAIMER: ONLY APPROVED AND SIGNED HARD COPIES SHALL BE USED FOR CONSTRUCTION

THIS DRAWING IS THE PROPERTY OF STUP CONSULTANTS Pvt. LTD. IT SHOULD NOT BE USED, COPIED, OR REPRODUCED WITHOUT THEIR WRITTEN PERMISSION.

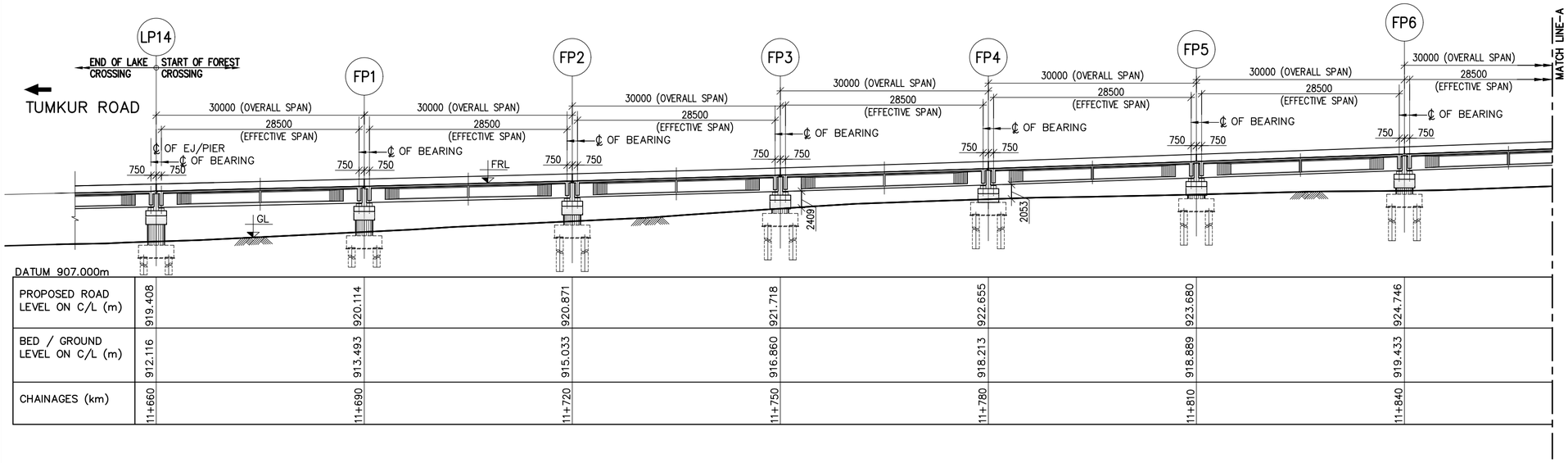

PROPOSED ROAD LEVEL ON C/L (m)	919.408	920.114	920.871	921.718	922.655	923.680	924.746
BED / GROUND LEVEL ON C/L (m)	912.116	913.493	915.033	916.860	918.213	918.889	919.433
CHAINAGES (km)	11+660	11+690	11+720	11+750	11+780	11+810	11+840

LONGITUDINAL SECTION
(SCALE 1:500)

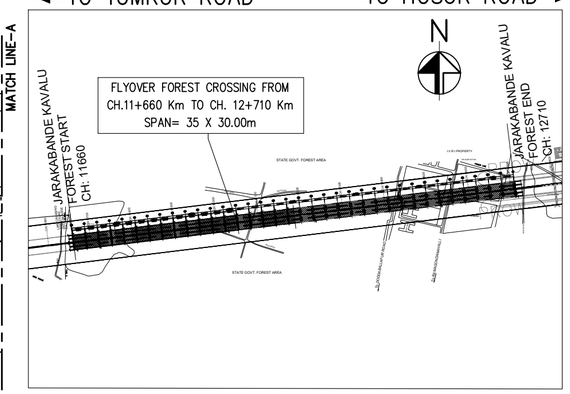

KEY PLAN
(SCALE 1:10000)

NOTED

1. ALL THE DIMENSIONS ARE IN MILLIMETERS AND CHAINAGES ARE IN METERS
2. DIMENSIONS SHALL NOT BE SCALED OFF, ONLY WRITTEN DIMENSIONS SHALL BE FOLLOWED.
3. GRADE OF CONCRETE SHALL BE FOLLOW AS:
   a) PSC SUPER STRUCTURE – M50
   b) PIER, PIER CAP & PEDESTAL – M45
   c) PILE & PILE CAP – M35
   d) CRASH BARRIER – M40
   e) APPROACH SLAB – M30
4. REINFORCEMENT SHALL BE HIGH STRENGTH DEFORMED BARS OF GRADE Fe500D CONFORMING TO IS:1786–2008 HAVING MINIMUM ELONGATION 14.5%
5. ALL BEARINGS ARE POT CUM PTFE TYPE.
6. EXPANSION JOINTS ARE WITH STRIP SEAL TYPE.
7. PERMANENT LINERS SHALL BE PROVIDED FOR PILES EXPOSED TO AGGRESSIVE SOIL.
8. DIMENSION OF STRUCTURAL MEMBERS SHOWN ARE INDICATIVE ONLY WHICH SHALL BE CONSIDERED BASED ON DETAILED DESIGN.
9. FOR CAMBER/SUPERELEVATION AND CROSS SECTION OF HIGHWAY AT SPECIFIC STRUCTURE LOCATIONS, RELEVANT TYPICAL CROSS SECTION DRAWING SHALL BE REFERRED.
10. PILE CAPACITY CONSIDERED AS 375T FOR 1.2 DIA PILE OF 25M LENGTH FOR FOUNDATION DESIGN.

LEGEND:

1) FRL – FINISHED ROAD LEVEL
2) EBL – EXISTING BED LEVEL
3) EJ – EXPANSION JOINT
4) ⊗ ▭ – POT PTFE BEARING
5) ⊗ ↑ – JACK POINT
6) TYP – TYPICAL
7) DC – DECK CONTINUES
8) GL – GROUND LEVEL

REFERENCE DRAWINGS: (LATEST REVISION)

N0533/E/MAJ/DD–008 TO 012....GENERAL ARRANGEMENT DRAWING FOR FLYOVER AT FOREST CROSSING FROM CH. 11+660 TO CH. 12+710 KM (SHEET–2 TO 7 OF 7)

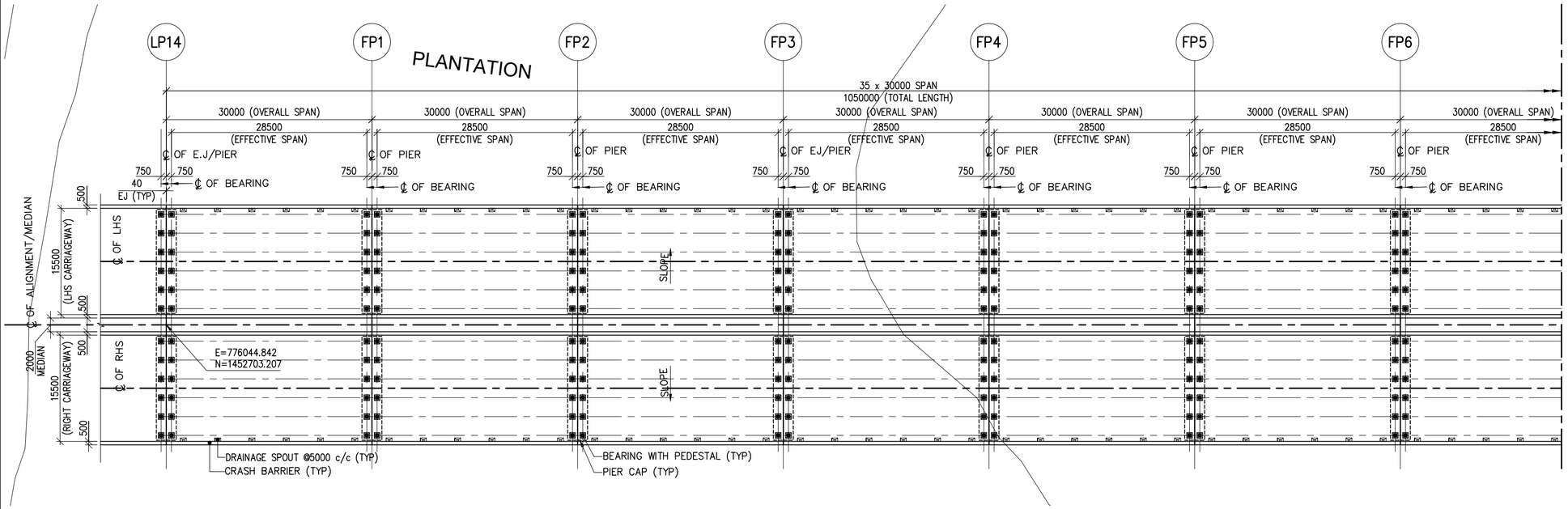

PLAN
(SCALE 1:500)

THE DIMENSIONS SHOWN ARE FOR TENDER PURPOSE ONLY

NOTES:

DATE	No.	REVISION	DRAWN	PREPARED	CHECKED	APPROVED
02–02–26	R0	FIRST SUBMISSION	VSK	AGA	MD	MD

☑ APPROVAL ☐ CONSTRUCTION
☐ INFORMATION ☐ TENDER
☐ DRAFT ☐ PRELIMNARY

RELEASED FOR

GIS					
HIGHWAYS			MAJOR STRUCTURES		
ELECTRICAL			IRRIGATION/ WATER RESOURCES		
BUILDINGS			PHE / PLUMBING/ FIREFIGHTING		
ARCHITECTURE			MECHANICAL / HVAC		
CHECKED BY	SIGN	DATE	CHECKED BY	SIGN	DATE

FOR INTERNAL OFFICE ONLY

CONSULTANT
STUP Consultants Pvt. Ltd.
REGISTERED OFFICE : Unit No.2702, 27th Floor, Rupa Renaissance, P.No.D–33 & D–207, Juinagar, MIDC TTC Industrial Area, Turbhe, Navi Mumbai, Thane, Maharashtra–400705. Tel: +91 (022) 68967777, E–mail: mumbai@assystem.com
OFFICE OF ORIGIN : #69, JP & Devi Jambukeshwar Arcade 4th Floor, Millers Road Bengaluru – 560 052 Tel.: 080 – 40 39 79 79 Email : bangalore@assystem.com

OWNER: BANGALORE DEVELOPMENT AUTHORITY

DATE: 02–02–2026

CONTRACTOR

DRAWN: VSK

PROJECT: CONSTRUCTION OF EIGHT LANE BENGALURU BUSINESS CORRIDOR (BBC)

PREPARED: AGA

CHECKED: MD

TITLE: GENERAL ARRANGEMENT DRAWING FOR FLYOVER AT FOREST CROSSING FROM CH. 11+660 TO CH. 12+710 KM (SHEET 1 OF 7)

APPROVED: MD

DRG.NO.: N0533/E/MAJ/DD–008 (R0)

SCALE: AS SHOWN

DISCLAIMER: ONLY APPROVED AND SIGNED HARD COPIES SHALL BE USED FOR CONSTRUCTION

THIS DRAWING IS THE PROPERTY OF STUP CONSULTANTS Pvt. LTD. IT SHOULD NOT BE USED, COPIED, OR REPRODUCED WITHOUT THEIR WRITTEN PERMISSION.

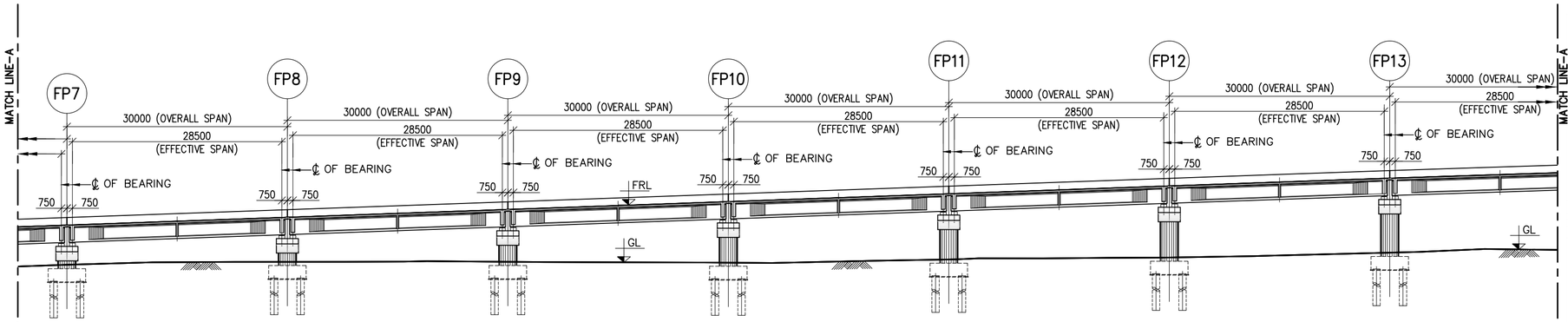

DATUM 907.000m

PROPOSED ROAD LEVEL ON C/L (m)	925.811	926.876	927.941	929.006	930.072	931.126	932.094
BED / GROUND LEVEL ON C/L (m)	920.386	920.777	920.787	920.667	921.105	921.371	922.032
CHAINAGES (km)	11+870	11+900	11+930	11+960	11+990	12+020	12+050

LONGITUDINAL SECTION
(SCALE 1:500)

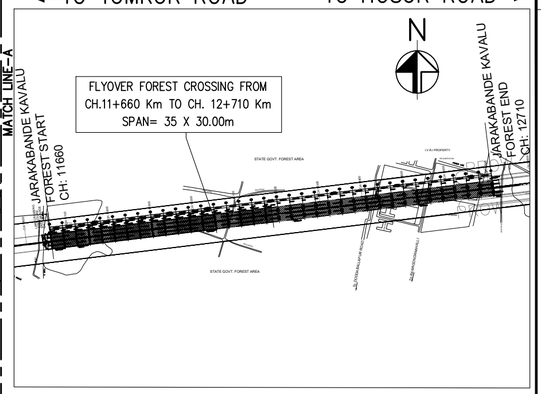

KEY PLAN
(SCALE 1:10000)

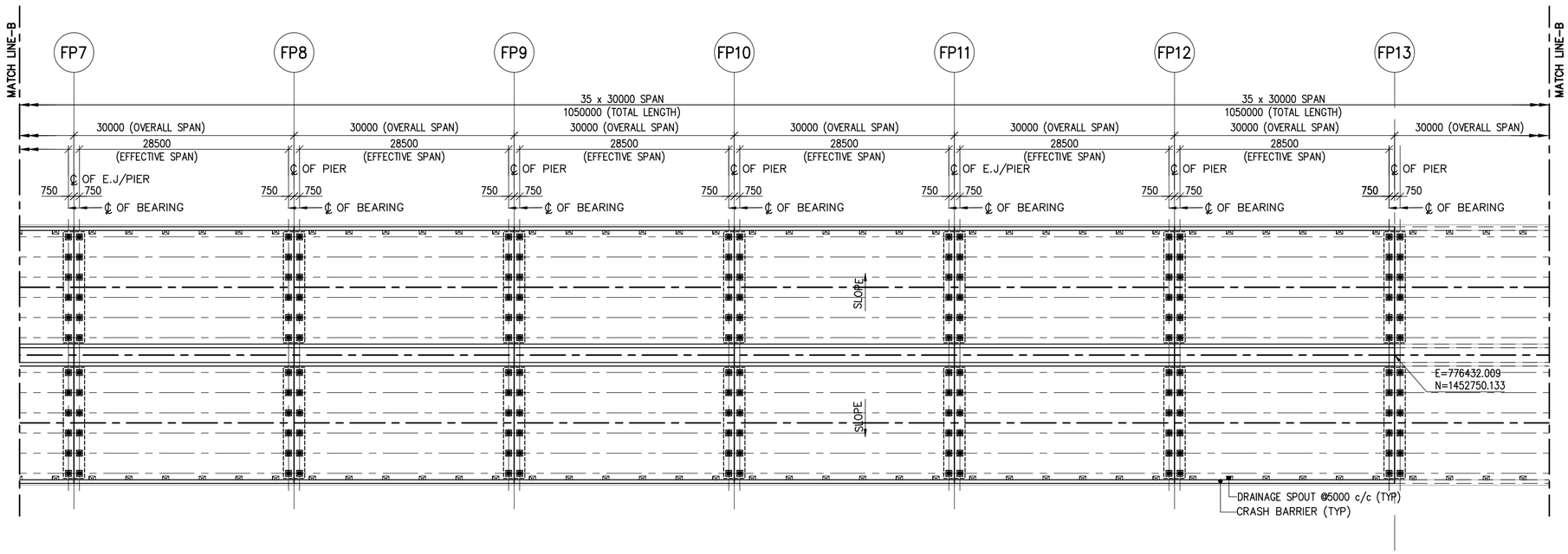

PLAN
(SCALE 1:500)

THE DIMENSIONS SHOWN ARE FOR TENDER PURPOSE ONLY

NOTES:

1. ALL DIMENSIONS ARE IN MILLIMETERS, LEVELS ARE IN METERS & CHAINAGES ARE IN KILOMETERS, UNLESS MENTIONED OTHERWISE.
2. DIMENSIONS ARE NOT TO BE SCALED OFF ONLY WRITTEN DIMENSIONS ARE TO BE FOLLOWED.

REFERENCE DRAWINGS: (LATEST REVISION)

N0533/E/MAJ/DD-008.... GENERAL ARRANGEMENT DRAWING FOR FLYOVER AT FOREST CROSSING FROM CH. 11+660 TO CH. 12+710 KM (SHEET-1 OF 7)

N0533/E/MAJ/DD-010 TO 012....GENERAL ARRANGEMENT DRAWING FOR FLYOVER AT FOREST CROSSING FROM CH. 11+660 TO CH. 12+710 KM (SHEET-3 TO 7 OF 7)

DATE	No.	REVISION	DRAWN	PREPARED	CHECKED	APPROVED
02-02-26	R0	FIRST SUBMISSION	VSK	AGA	MD	MD

☑ APPROVAL ☐ CONSTRUCTION
☐ INFORMATION ☐ TENDER
☐ DRAFT ☐ PRELIMNARY

RELEASED FOR

GIS						
HIGHWAYS			MAJOR STRUCTURES			
ELECTRICAL			IRRIGATION/ WATER RESOURCES			
BUILDINGS			PHE / PLUMBING/ FIREFIGHTING			
ARCHITECTURE			MECHANICAL / HVAC			
CHECKED BY	SIGN	DATE	CHECKED BY	SIGN	DATE	

FOR INTERNAL OFFICE ONLY

CONSULTANT
STUP Consultants Pvt. Ltd.
REGISTERED OFFICE : Unit No.2702, 27th Floor, Rupa Renaissance, P.No.D-33 & D-207, Juinagar, MIDC TTC Industrial Area, Turbhe, Navi Mumbai, Thane, Maharashtra-400705 Tel: +91 (022) 68067777, E-mail: mumbai@assystem.com
OFFICE OF ORIGIN : #69, JP & Devi Jambukeshwar Arcade 4th Floor, Millers Road Bengaluru - 560 052 Tel.: 080 - 40 39 79 79 Email : bangalore@assystem.com

OWNER: BANGALORE DEVELOPMENT AUTHORITY

CONTRACTOR

PROJECT: CONSTRUCTION OF EIGHT LANE BENGALURU BUSINESS CORRIDOR (BBC)

TITLE: GENERAL ARRANGEMENT DRAWING FOR FLYOVER AT FOREST CROSSING FROM CH. 11+660 TO CH. 12+710 KM (SHEET 2 OF 7)

DRG.NO.: N0533/E/MAJ/DD-009 (R0)

DATE: 02-02-2026
DRAWN: VSK
PREPARED: AGA
CHECKED: MD
APPROVED: MD
SCALE: AS SHOWN

DISCLAIMER: ONLY APPROVED AND SIGNED HARD COPIES SHALL BE USED FOR CONSTRUCTION

THIS DRAWING IS THE PROPERTY OF STUP CONSULTANTS Pvt. LTD. IT SHOULD NOT BE USED, COPIED, OR REPRODUCED WITHOUT THEIR WRITTEN PERMISSION.

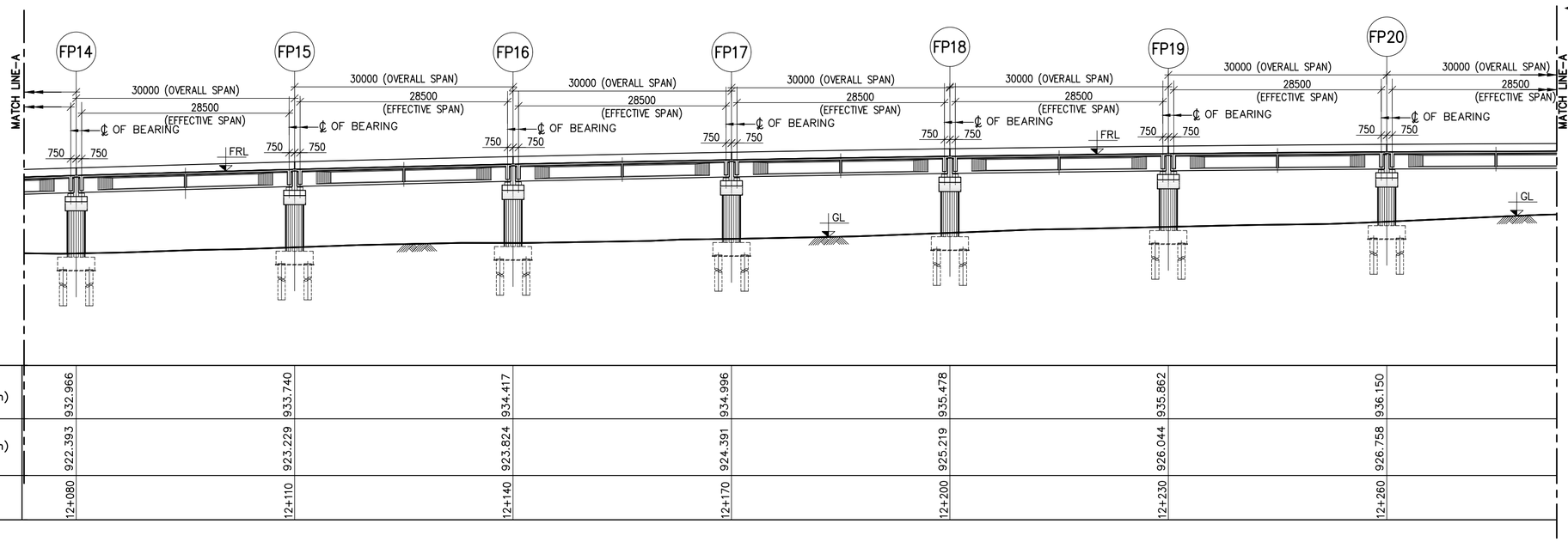

DATUM 907.000m

PROPOSED ROAD LEVEL ON C/L (m)	932.966	933.740	934.417	934.996	935.478	935.862	936.150
BED / GROUND LEVEL ON C/L (m)	922.393	923.229	923.824	924.391	925.219	926.044	926.758
CHAINAGES (km)	12+080	12+110	12+140	12+170	12+200	12+230	12+260

LONGITUDINAL SECTION
(SCALE 1:500)

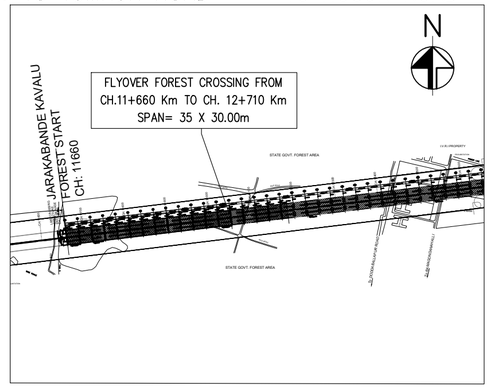

KEY PLAN
(SCALE 1:10000)

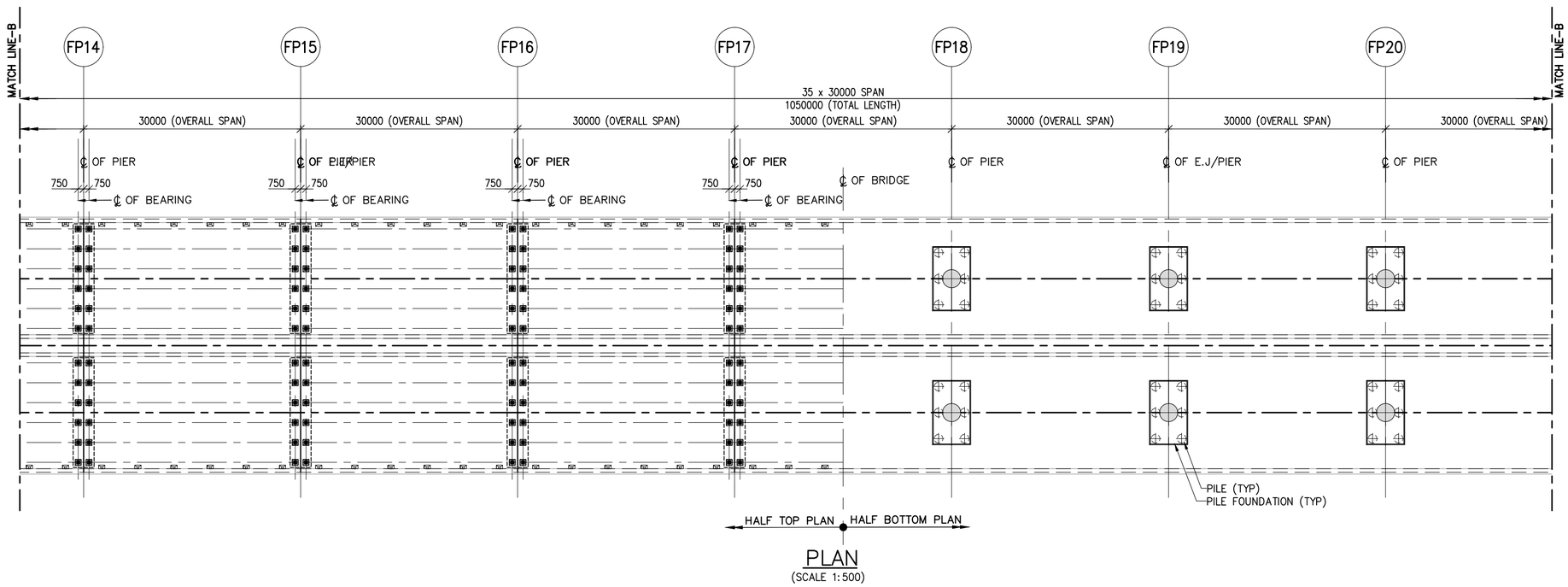

PLAN
(SCALE 1:500)

THE DIMENSIONS SHOWN ARE FOR TENDER PURPOSE ONLY

NOTES:

1. ALL DIMENSIONS ARE IN MILLIMETERS, LEVELS ARE IN METERS & CHAINAGES ARE IN KILOMETERS, UNLESS MENTIONED OTHERWISE.
2. DIMENSIONS ARE NOT TO BE SCALED OFF ONLY WRITTEN DIMENSIONS ARE TO BE FOLLOWED.

REFERENCE DRAWINGS: (LATEST REVISION)

N0533/E/MAJ/DD-008 & 009... GENERAL ARRANGEMENT DRAWING FOR FLYOVER AT FOREST CROSSING FROM CH. 11+660 TO CH. 12+710 KM (SHEET-1 OF 7) & (SHEET-2 OF 7)

N0533/E/MAJ/DD-011 & 012.... GENERAL ARRANGEMENT DRAWING FOR FLYOVER AT FOREST CROSSING FROM CH. 11+660 TO CH. 12+710 KM (SHEET-4 OF 7) & (SHEET-7 OF 7)

DATE	No.	REVISION	DRAWN	PREPARED	CHECKED	APPROVED
02-02-26	R0	FIRST SUBMISSION	VSK	AGA	MD	MD

☑ APPROVAL ☐ CONSTRUCTION
☐ INFORMATION ☐ TENDER
☐ DRAFT ☐ PRELIMNARY

RELEASED FOR

GIS					
HIGHWAYS			MAJOR STRUCTURES		
ELECTRICAL			IRRIGATION/ WATER RESOURCES		
BUILDINGS			PHE / PLUMBING/ FIREFIGHTING		
ARCHITECTURE			MECHANICAL / HVAC		
CHECKED BY	SIGN	DATE	CHECKED BY	SIGN	DATE

FOR INTERNAL OFFICE ONLY

CONSULTANT
STUP Consultants Pvt. Ltd.
REGISTERED OFFICE : Unit No.2702, 27th Floor, Rupa Renaissance, P.No.D-33 & D-207, Juinagar, MIDC TTC Industrial Area, Turbhe, Navi Mumbai, Thane, Maharashtra-400705 Tel: +91 (022) 68067777, E-mail: mumbai@assystem.com
OFFICE OF ORIGIN : #69, 3rd & Dev Jambukeshwar Arcade 4th Floor, Millers Road Bengaluru - 560 052 Tel.: 080 - 40 39 79 79 Email : bangalore@assystem.com

OWNER: BANGALORE DEVELOPMENT AUTHORITY

CONTRACTOR:

PROJECT: CONSTRUCTION OF EIGHT LANE BENGALURU BUSINESS CORRIDOR (BBC)

TITLE: GENERAL ARRANGEMENT DRAWING FOR FLYOVER AT FOREST CROSSING FROM CH. 11+660 TO CH. 12+710 KM (SHEET 3 OF 7)

DRG.NO.: N0533/E/MAJ/DD-010 (R0)

DATE: 02-02-2026
DRAWN: VSK
PREPARED: AGA
CHECKED: MD
APPROVED: MD
SCALE: AS SHOWN

DISCLAIMER: ONLY APPROVED AND SIGNED HARD COPIES SHALL BE USED FOR CONSTRUCTION

THIS DRAWING IS THE PROPERTY OF STUP CONSULTANTS Pvt. LTD. IT SHOULD NOT BE USED, COPIED, OR REPRODUCED WITHOUT THEIR WRITTEN PERMISSION.

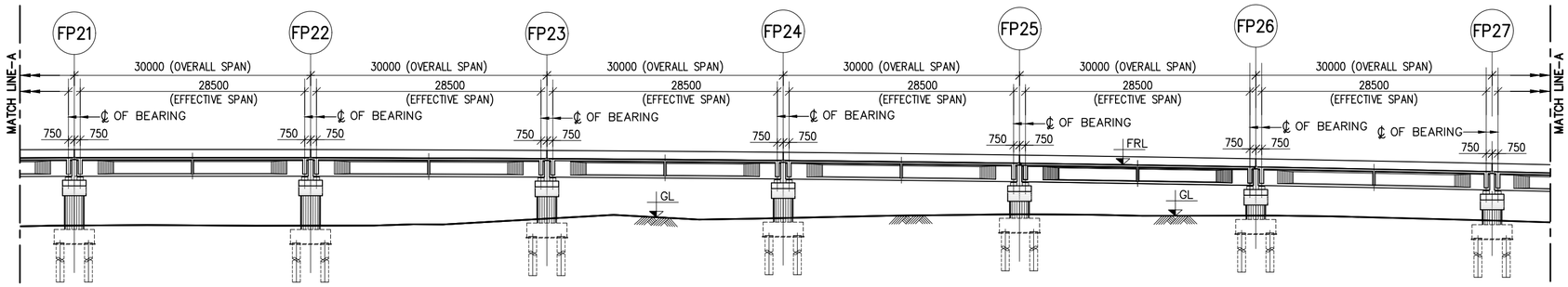

DATUM 907.000m							
PROPOSED ROAD LEVEL ON C/L (m)	936.399	936.432	936.427	936.324	936.124	935.336	934.745
BED / GROUND LEVEL ON C/L (m)	927.852	927.836	928.728	928.803	929.284	929.112	928.490
CHAINAGES (km)	12+290	12+320	12+350	12+380	12+410	12+440	12+470

LONGITUDINAL SECTION
(SCALE 1:500)

TO TUMKUR ROAD — TO HOSUR ROAD

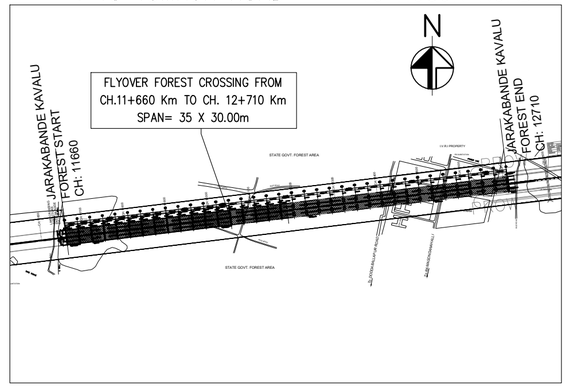

KEY PLAN
(SCALE 1:10000)

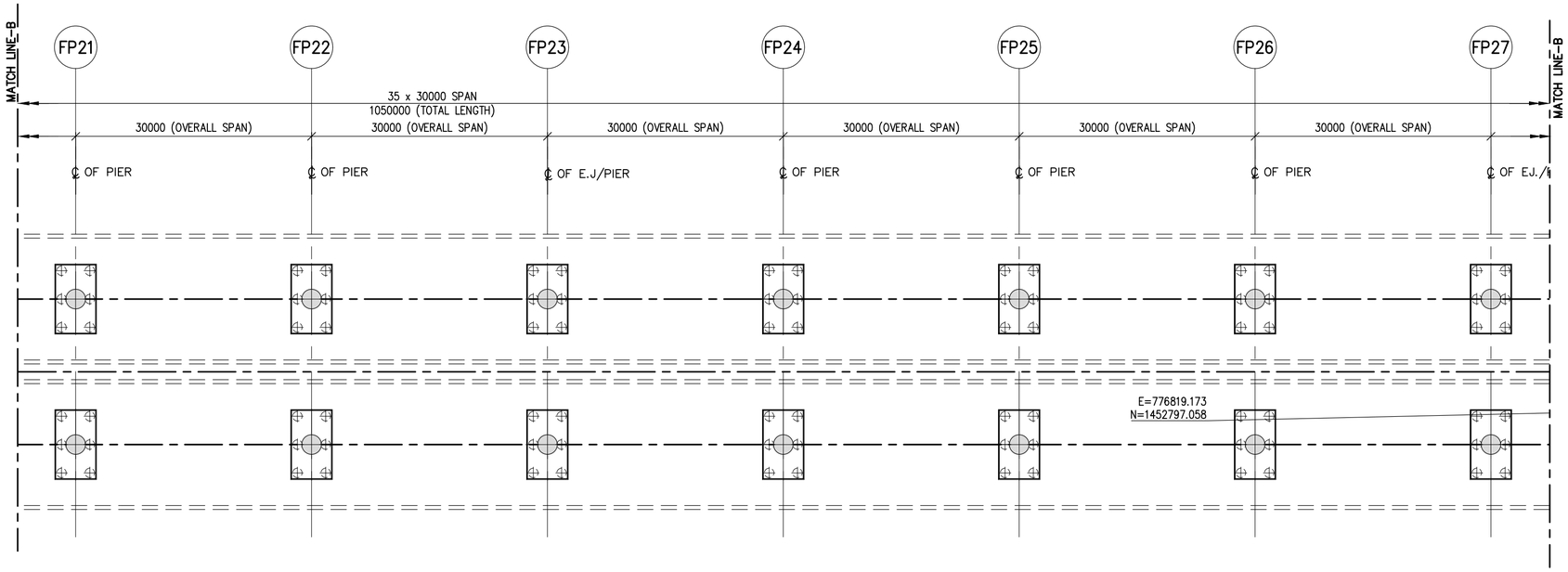

PLAN
(SCALE 1:500)

THE DIMENSIONS SHOWN ARE FOR TENDER PURPOSE ONLY

NOTES:

1. ALL DIMENSIONS ARE IN MILLIMETERS, LEVELS ARE IN METERS & CHAINAGES ARE IN KILOMETERS, UNLESS MENTIONED OTHERWISE.
2. DIMENSIONS ARE NOT TO BE SCALED OFF ONLY WRITTEN DIMENSIONS ARE TO BE FOLLOWED.

REFERENCE DRAWINGS: (LATEST REVISION)

N0533/E/MAJ/DD-008 TO 010... GENERAL ARRANGEMENT DRAWING FOR FLYOVER AT FOREST CROSSING FROM CH. 11+660 TO CH. 12+710 KM (SHEET-1 TO 3 OF 7)

N0533/E/MAJ/DD-011A TO 012...GENERAL ARRANGEMENT DRAWING FOR FLYOVER AT FOREST CROSSING FROM CH. 11+660 TO CH. 12+710 KM (SHEET-5 TO 7 OF 7)

DATE	No.	REVISION	DRAWN	PREPARED	CHECKED	APPROVED
02-02-26	R0	FIRST SUBMISSION	VSK	AGA	MD	MD

☑ APPROVAL ☐ CONSTRUCTION
☐ INFORMATION ☐ TENDER
☐ DRAFT ☐ PRELIMNARY

RELEASED FOR

GIS						
HIGHWAYS			MAJOR STRUCTURES			
ELECTRICAL			IRRIGATION/ WATER RESOURCES			
BUILDINGS			PHE / PLUMBING/ FIREFIGHTING			
ARCHITECTURE			MECHANICAL / HVAC			
CHECKED BY	SIGN	DATE	CHECKED BY	SIGN	DATE	

FOR INTERNAL OFFICE ONLY

CONSULTANT
STUP Consultants Pvt. Ltd.
REGISTERED OFFICE : Unit No.2702, 27th Floor, Rupa Renaissance, P.No.D-33 & D-207, Juinagar, MIDC TTC Industrial Area, Turbhe, Navi Mumbai, Thane, Maharashtra-400705 Tel: +91 (022) 68067777, E-mail: mumbai@assystem.com
OFFICE OF ORIGIN : #69, JP & Devi Jambulekshwar Arcade 4th Floor, Millers Road Bengaluru - 560 052 Tel.: 080 - 40 39 79 79 Email : bangalore@assystem.com

OWNER: BANGALORE DEVELOPMENT AUTHORITY

CONTRACTOR

PROJECT: CONSTRUCTION OF EIGHT LANE BENGALURU BUSINESS CORRIDOR (BBC)

TITLE: GENERAL ARRANGEMENT DRAWING FOR FLYOVER AT FOREST CROSSING FROM CH. 11+660 TO CH. 12+710 KM (SHEET 4 OF 7)

DRG.NO.: N0533/E/MAJ/DD-011 (R0)

DATE: 02-02-2026
DRAWN: VSK
PREPARED: AGA
CHECKED: MD
APPROVED: MD
SCALE: AS SHOWN

DISCLAIMER: ONLY APPROVED AND SIGNED HARD COPIES SHALL BE USED FOR CONSTRUCTION

THIS DRAWING IS THE PROPERTY OF STUP CONSULTANTS Pvt. LTD. IT SHOULD NOT BE USED, COPIED, OR REPRODUCED WITHOUT THEIR WRITTEN PERMISSION.

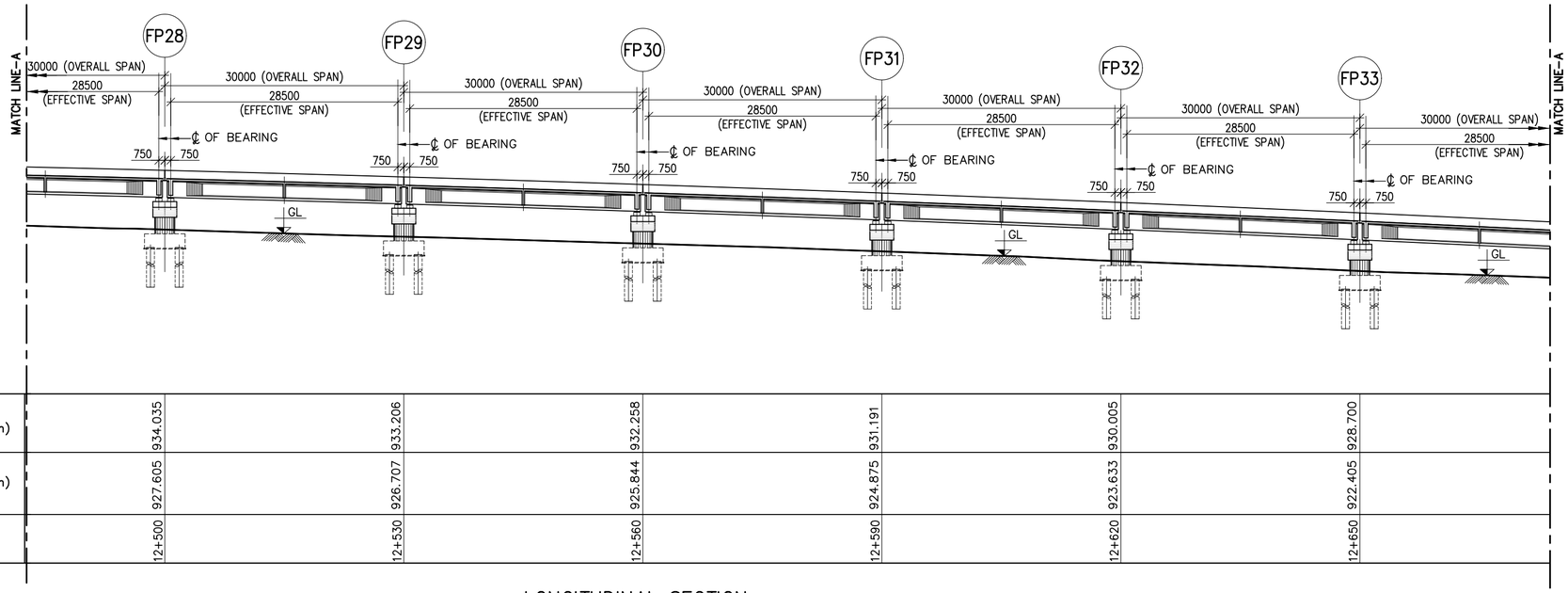

DATUM 907.000m						
PROPOSED ROAD LEVEL ON C/L (m)	934.035	933.206	932.258	931.191	930.005	928.700
BED / GROUND LEVEL ON C/L (m)	927.605	926.707	925.844	924.875	923.633	922.405
CHAINAGES (km)	12+500	12+530	12+560	12+590	12+620	12+650

LONGITUDINAL SECTION
(SCALE 1:500)

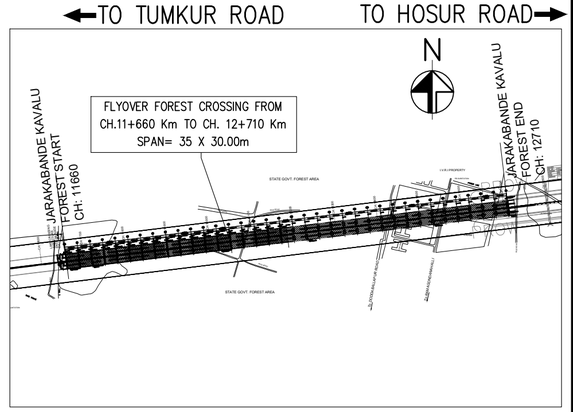

KEY PLAN
(SCALE 1:10000)

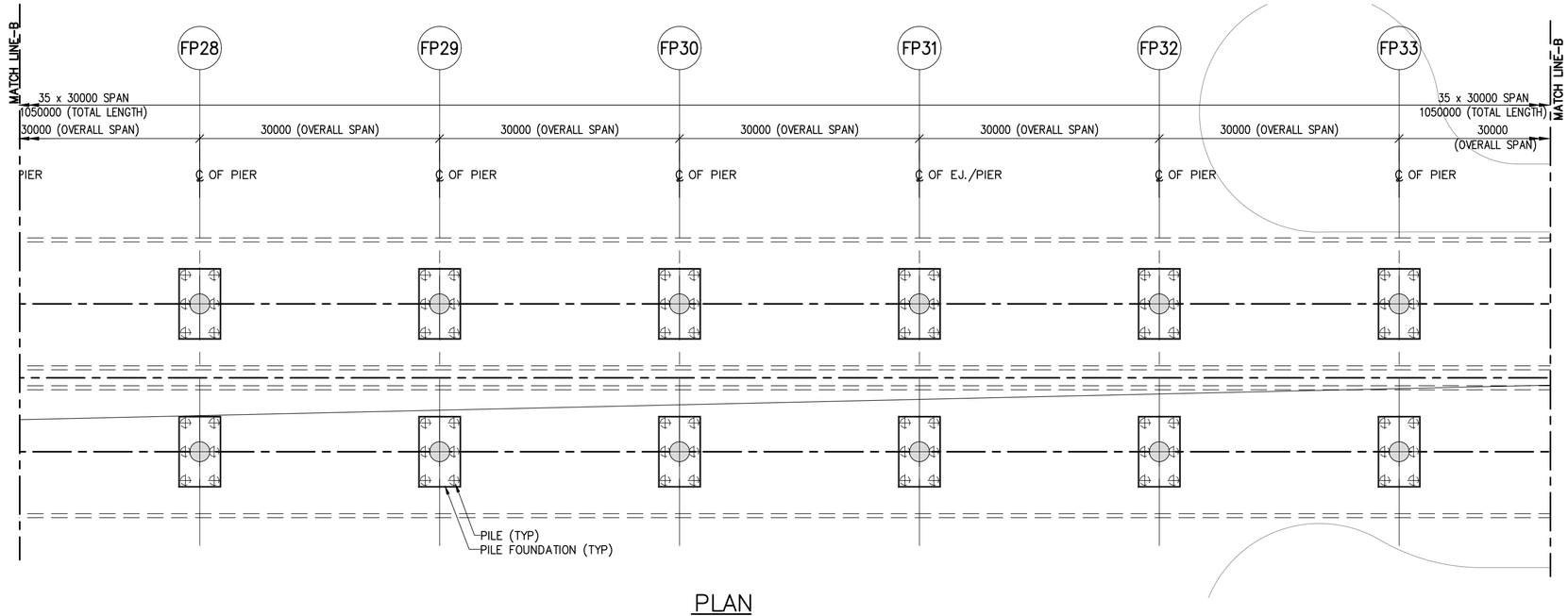

PLAN
(SCALE 1:500)

THE DIMENSIONS SHOWN ARE FOR TENDER PURPOSE ONLY

NOTES:

1. ALL DIMENSIONS ARE IN MILLIMETERS, LEVELS ARE IN METERS & CHAINAGES ARE IN KILOMETERS, UNLESS MENTIONED OTHERWISE.
2. DIMENSIONS ARE NOT TO BE SCALED OFF ONLY WRITTEN DIMENSIONS ARE TO BE FOLLOWED.

REFERENCE DRAWINGS: (LATEST REVISION)

N0533/E/MAJ/DD-008 TO 011... GENERAL ARRANGEMENT DRAWING FOR FLYOVER AT FOREST CROSSING FROM CH. 11+660 TO CH. 12+710 KM (SHEET-1 TO 4 OF 7)

N0533/E/MAJ/DD-011B TO 012... GENERAL ARRANGEMENT DRAWING FOR FLYOVER AT FOREST CROSSING FROM CH. 11+660 TO CH. 12+710 KM (SHEET-6 TO 7 OF 7)

DATE	No.	REVISION	DRAWN	PREPARED	CHECKED	APPROVED
02-02-26	R0	FIRST SUBMISSION	VSK	AGA	MD	MD

☑ APPROVAL ☐ CONSTRUCTION
☐ INFORMATION ☐ TENDER
☐ DRAFT ☐ PRELIMNARY

RELEASED FOR

GIS						
HIGHWAYS			MAJOR STRUCTURES			
ELECTRICAL			IRRIGATION/ WATER RESOURCES			
BUILDINGS			PHE / PLUMBING/ FIREFIGHTING			
ARCHITECTURE			MECHANICAL / HVAC			
CHECKED BY	SIGN	DATE	CHECKED BY	SIGN	DATE	

FOR INTERNAL OFFICE ONLY

CONSULTANT
STUP Consultants Pvt. Ltd.
REGISTERED OFFICE : Unit No.2702, 27th Floor, Rupa Renaissance, P.No.D-33 & D-207, Juinagar, MIDC TTC Industrial Area, Turbhe, Navi Mumbai, Thane, Maharashtra-400705 Tel: +91 (022) 68067777, E-mail: mumbai@assystem.com
OFFICE OF ORIGIN : #69, JP & Devi Jambukeshwar Arcade 4th Floor, Millers Road Bengaluru - 560 052 Tel.: 080 - 40 39 79 79 Email : bangalore@assystem.com

OWNER: BANGALORE DEVELOPMENT AUTHORITY

CONTRACTOR:

PROJECT: CONSTRUCTION OF EIGHT LANE BENGALURU BUSINESS CORRIDOR (BBC)

TITLE: GENERAL ARRANGEMENT DRAWING FOR FLYOVER AT FOREST CROSSING FROM CH. 11+660 TO CH. 12+710 KM (SHEET 5 OF 7)

DRG.NO.: N0533/E/MAJ/DD-011A (R0)

DATE: 02-02-2026
DRAWN: VSK
PREPARED: AGA
CHECKED: MD
APPROVED: MD
SCALE: AS SHOWN

DISCLAIMER: ONLY APPROVED AND SIGNED HARD COPIES SHALL BE USED FOR CONSTRUCTION

THIS DRAWING IS THE PROPERTY OF STUP CONSULTANTS Pvt. LTD. IT SHOULD NOT BE USED, COPIED, OR REPRODUCED WITHOUT THEIR WRITTEN PERMISSION.

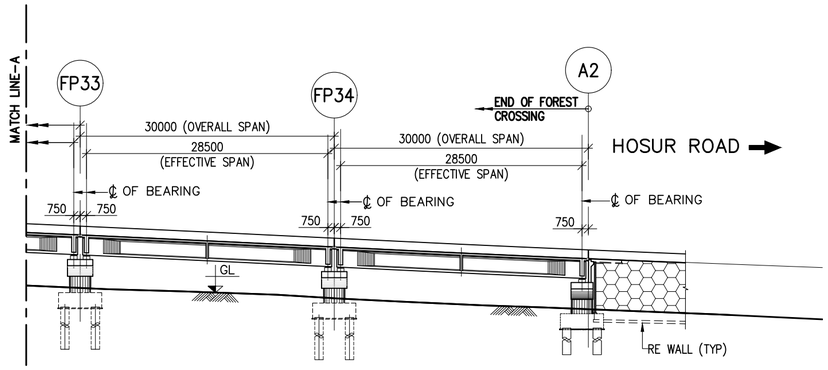

DATUM 907.000m

PROPOSED ROAD LEVEL ON C/L (m)	928.700	927.280	925.897
BED / GROUND LEVEL ON C/L (m)	922.405	921.187	919.891
CHAINAGES (km)	12+650	12+680	12+710

LONGITUDINAL SECTION
(SCALE 1:500)

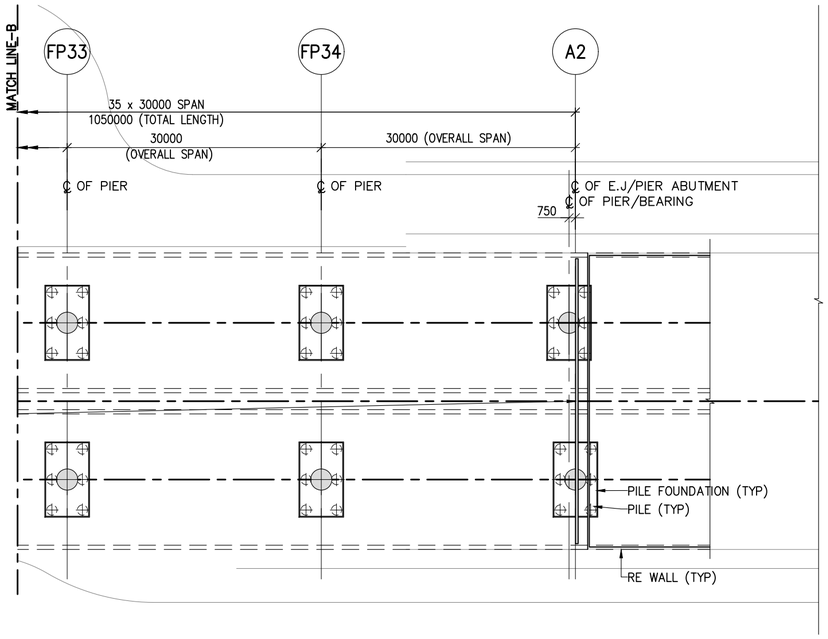

PLAN
(SCALE 1:500)

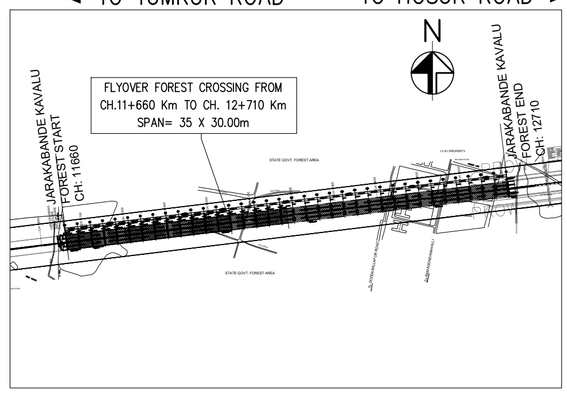

KEY PLAN
(SCALE 1:10000)

NOTES:

1. ALL DIMENSIONS ARE IN MILLIMETERS, LEVELS ARE IN METERS & CHAINAGES ARE IN KILOMETERS, UNLESS MENTIONED OTHERWISE.
2. DIMENSIONS ARE NOT TO BE SCALED OFF ONLY WRITTEN DIMENSIONS ARE TO BE FOLLOWED.

REFERENCE DRAWINGS: (LATEST REVISION)

N0533/E/MAJ/DD-008 TO 011A... GENERAL ARRANGEMENT DRAWING FOR FLYOVER AT FOREST CROSSING FROM CH. 11+660 TO CH. 12+710 KM (SHEET-1 TO 5 OF 7)

N0533/E/MAJ/DD-012..... GENERAL ARRANGEMENT DRAWING FOR FLYOVER AT FOREST CROSSING FROM CH. 11+660 TO CH. 12+710 KM (SHEET-7 OF 7)

DATE	No.	REVISION	DRAWN	PREPARED	CHECKED	APPROVED
02-02-26	R0	FIRST SUBMISSION	VSK	AGA	MD	MD

THE DIMENSIONS SHOWN ARE FOR TENDER PURPOSE ONLY

☑ APPROVAL	☐ CONSTRUCTION		
☐ INFORMATION	☐ TENDER		
☐ DRAFT	☐ PRELIMNARY		

RELEASED FOR

GIS					
HIGHWAYS			MAJOR STRUCTURES		
ELECTRICAL			IRRIGATION/ WATER RESOURCES		
BUILDINGS			PHE / PLUMBING/ FIREFIGHTING		
ARCHITECTURE			MECHANICAL / HVAC		
CHECKED BY	SIGN	DATE	CHECKED BY	SIGN	DATE

FOR INTERNAL OFFICE ONLY

CONSULTANT
STUP Consultants Pvt. Ltd.
REGISTERED OFFICE : Unit No.2702, 27th Floor, Rupa Renaissance, P.No.D-33 & D-207, Juinagar, MIDC TTC Industrial Area, Turbhe, Navi Mumbai, Thane, Maharashtra-400705. Tel: +91 (022) 68067777, E-mail: mumbai@assystem.com
OFFICE OF ORIGIN : #69, JP & Devi Jambukeshwar Arcade 4th Floor, Millers Road Bengaluru – 560 052 Tel.: 080 – 40 39 79 79 Email : bangalore@assystem.com

OWNER: BANGALORE DEVELOPMENT AUTHORITY

DATE: 02-02-2026

CONTRACTOR

DRAWN: VSK

PROJECT: CONSTRUCTION OF EIGHT LANE BENGALURU BUSINESS CORRIDOR (BBC)

PREPARED: AGA

CHECKED: MD

TITLE: GENERAL ARRANGEMENT DRAWING FOR FLYOVER AT FOREST CROSSING FROM CH. 11+660 TO CH. 12+710 KM (SHEET 6 OF 7)

APPROVED: MD

DRG.NO.: N0533/E/MAJ/DD-011B (R0)

SCALE: AS SHOWN

DISCLAIMER: ONLY APPROVED AND SIGNED HARD COPIES SHALL BE USED FOR CONSTRUCTION

THIS DRAWING IS THE PROPERTY OF STUP CONSULTANTS Pvt. LTD. IT SHOULD NOT BE USED, COPIED, OR REPRODUCED WITHOUT THEIR WRITTEN PERMISSION.

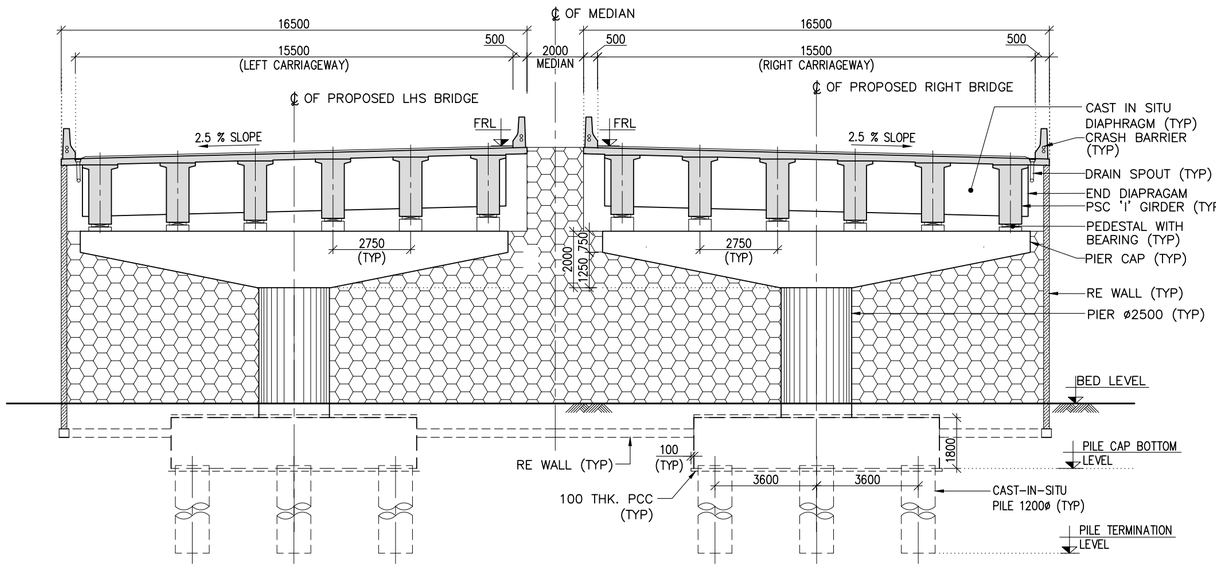

TYPICAL CROSS SECTION AT ABUTMENT A2

(SCALE 1:150)

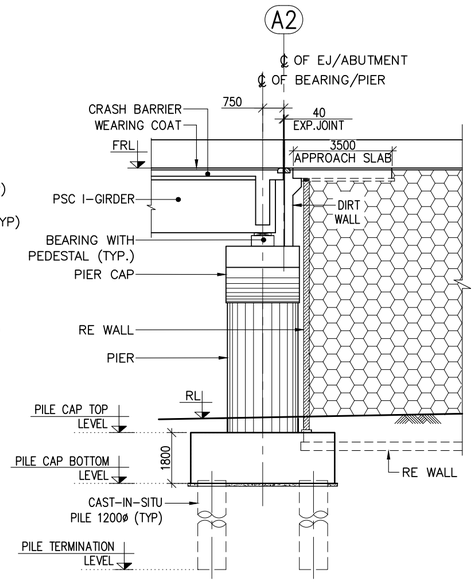

ELEVATION OF ABUTMENT

(SCALE 1:150)

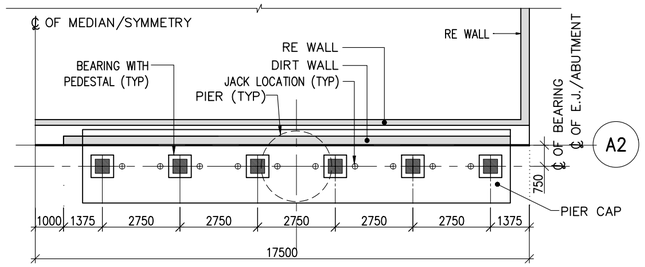

DETAILS OF ABUTMENT PIER CAP

(SCALE 1:150)

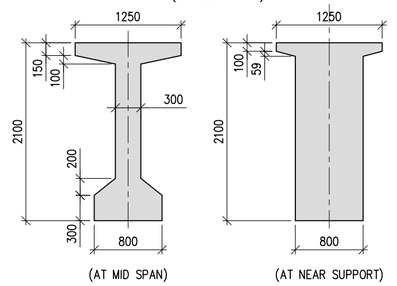

DETAIL OF PRECAST PSC GIRDER

(SCALE 1:50)

TYPICAL CROSS SECTION AT PIER

(SCALE 1:150)

VIEW 'Y'

(SCALE 1:150)

PLAN AT A–A

(SCALE 1:150)

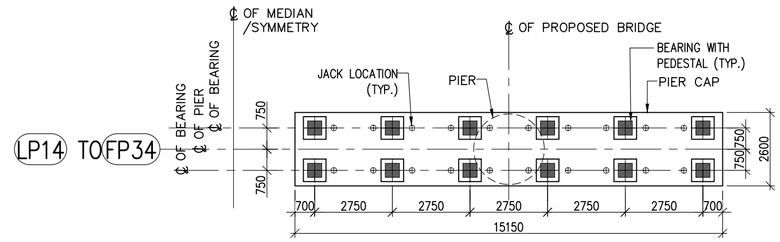

DETAILS OF PIER CAP

(SCALE 1:150)

NOTES:

1. ALL DIMENSIONS ARE IN MILLIMETERS, LEVELS ARE IN METERS & CHAINAGES ARE IN KILOMETERS, UNLESS MENTIONED OTHERWISE.
2. DIMENSIONS ARE NOT TO BE SCALED OFF ONLY WRITTEN DIMENSIONS ARE TO BE FOLLOWED.

REFERENCE DRAWINGS: (LATEST REVISION)

N0533/E/MAJ/DD-008 TO 011B....	GAD FOR FLYOVER AT FOREST CROSSING FROM CH:11+660 Km TO CH:12+710 Km (SHEET-1 TO 6 OF 7)

THE DIMENSIONS SHOWN ARE FOR TENDER PURPOSE ONLY

DATE	No.	REVISION	DRAWN	PREPARED	CHECKED	APPROVED
02-02-26	R0	FIRST SUBMISSION	VSK	AGA	MD	MD

☑ APPROVAL ☐ CONSTRUCTION
☐ INFORMATION ☐ TENDER
☐ DRAFT ☐ PRELIMNARY

RELEASED FOR

GIS					
HIGHWAYS			MAJOR STRUCTURES		
ELECTRICAL			IRRIGATION/ WATER RESOURCES		
BUILDINGS			PHE / PLUMBING/ FIREFIGHTING		
ARCHITECTURE			MECHANICAL / HVAC		
CHECKED BY	SIGN	DATE	CHECKED BY	SIGN	DATE

FOR INTERNAL OFFICE ONLY

CONSULTANT: STUP Consultants Pvt. Ltd.
REGISTERED OFFICE : Unit No.2702, 27th Floor, Rupa Renaissance, P.No.D-33 & D-207, Juinagar, MIDC TTC Industrial Area, Turbhe, Navi Mumbai, Thane, Maharashtra-400705. Tel: +91 (022) 68067777, E-mail: mumbai@assystem.com
OFFICE OF ORIGIN : #69, JP & Devi Jambulekshwar Arcade 4th Floor, Millers Road Bengaluru – 560 052 Tel.: 080 – 40 39 79 79 Email : bangalore@assystem.com
OWNER: BANGALORE DEVELOPMENT AUTHORITY
CONTRACTOR:
PROJECT: CONSTRUCTION OF EIGHT LANE BENGALURU BUSINESS CORRIDOR (BBC)
TITLE: GENERAL ARRANGEMENT DRAWING FOR FLYOVER AT FOREST CROSSING FROM CH. 11+660 TO CH. 12+710 KM (SHEET 7 OF 7)
DRG.NO.: N0533/E/MAJ/DD-012 (R0)

DATE	02-02-2026
DRAWN	VSK
PREPARED	AGA
CHECKED	MD
APPROVED	MD
SCALE:	AS SHOWN

DISCLAIMER: ONLY APPROVED AND SIGNED HARD COPIES SHALL BE USED FOR CONSTRUCTION

THIS DRAWING IS THE PROPERTY OF STUP CONSULTANTS Pvt. LTD. IT SHOULD NOT BE USED, COPIED, OR REPRODUCED WITHOUT THEIR WRITTEN PERMISSION.

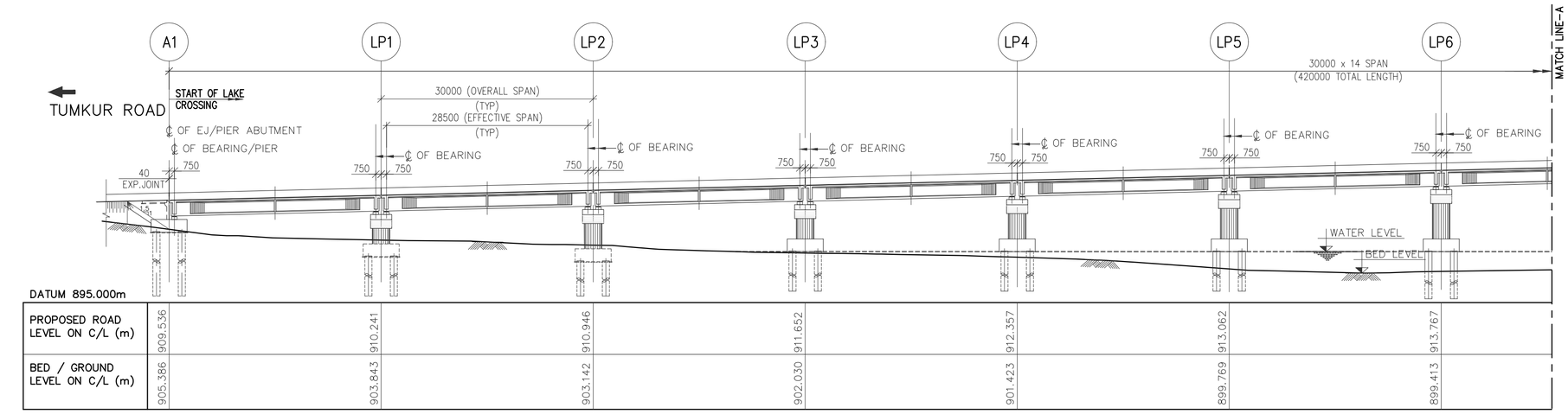

PROPOSED ROAD LEVEL ON C/L (m)	909.536	910.241	910.946	911.652	912.357	913.062	913.767
BED / GROUND LEVEL ON C/L (m)	905.386	903.843	903.142	902.030	901.423	899.769	899.413

TYPICAL LONGITUDINAL SECTION
(SCALE 1:500)

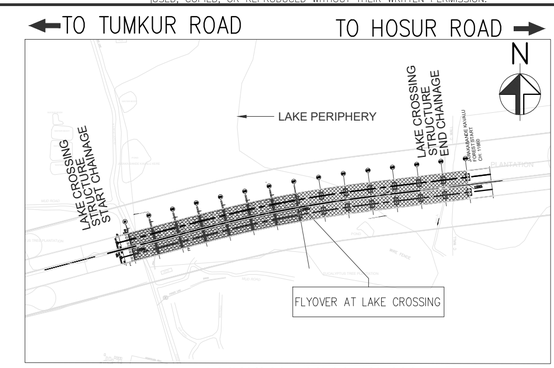

TYPICAL KEY PLAN
(SCALE 1:5000)

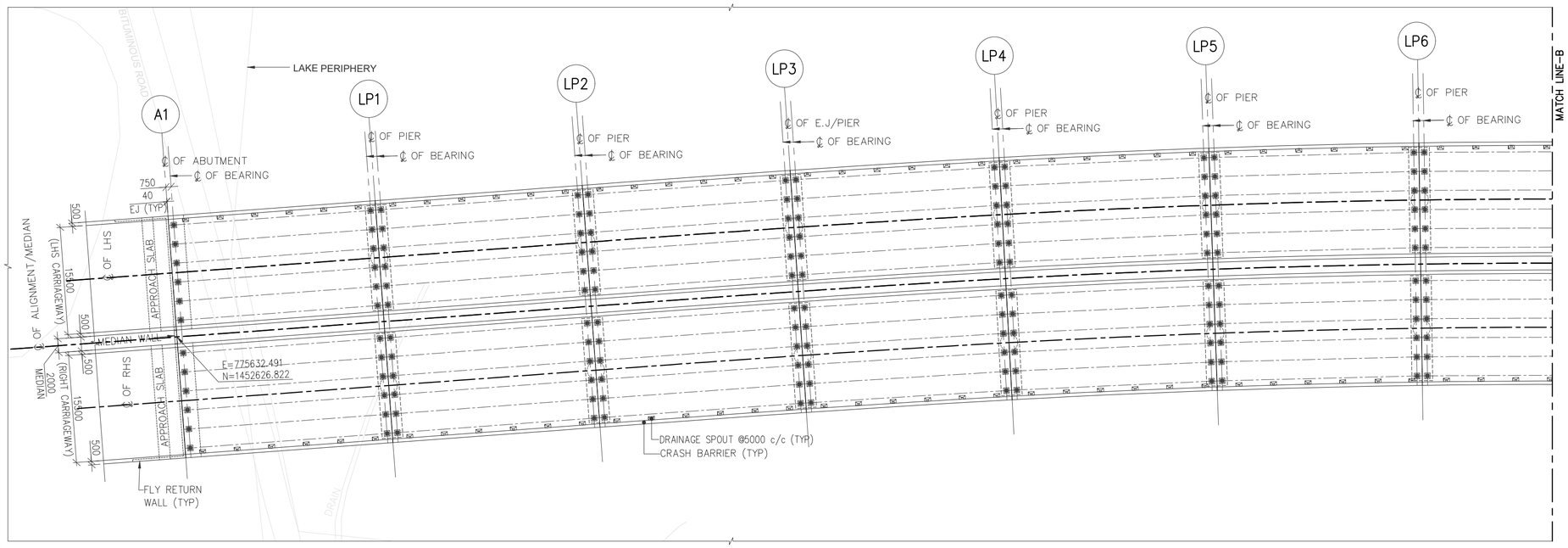

TYPICAL PLAN
(SCALE 1:500)

NOTES:

1. ALL THE DIMENSIONS ARE IN MILLIMETERS AND CHAINAGES ARE IN METERS
2. DIMENSIONS SHALL NOT BE SCALED OFF, ONLY WRITTEN DIMENSIONS SHALL BE FOLLOWED
3. GRADE OF CONCRETE SHALL BE FOLLOW AS:
   a) PSC SUPER STRUCTURE – M50
   b) PIER, PIER CAP & PEDESTAL – M45
   c) PILE & PILE CAP – M35
   d) CRASH BARRIER – M40
   e) APPROACH SLAB – M30
4. REINFORCEMENT SHALL BE HIGH STRENGTH DEFORMED BARS OF GRADE Fe500D CONFORMING TO IS:1786-2008 HAVING MINIMUM ELONGATION 14.5%
5. ALL BEARINGS ARE POT CUM PTFE TYPE.
6. EXPANSION JOINTS ARE WITH STRIP SEAL TYPE.
7. PERMANENT LINERS SHALL BE PROVIDED FOR PILES EXPOSED TO AGGRESSIVE SOIL.
8. DIMENSION OF STRUCTURAL MEMBERS SHOWN ARE INDICATIVE ONLY WHICH SHALL BE CONSIDERED BASED ON DETAILED DESIGN.
9. ABOVE DETAILS ARE OF TYPICAL NATURE TO INDICATE THE TYPE OF STRUCTURE AND SPACING OF STRUCTURAL MEMBER. ACTUAL CONSTRUCTION DESIGN MAY BE DIFFERENT BASED ON SITE CONDITIONS.
10. PIER CAP FINISHED LEVEL TO BE ABOVE WATER LEVEL AND IN CONCURRENCE WITH EGL AT PERIPHERY OF LAKE BUFFER ZONE.
11. BED LEVEL INDICATED IS AS PER DATA RECEIVED FROM LAKE AUTHORITY AND TO BE CONFIRMED BY THE BIDDER WHILE BIDDING.
12. PILE CAPACITY CONSIDERED AS 375T FOR 1.2 DIA PILE OF 25M LENGTH FOR FOUNDATION DESIGN.
13. FOR CAMBER/SUPERELEVATION AND CROSS SECTION OF HIGHWAY AT SPECIFIC STRUCTURE LOCATIONS, RELEVANT TYPICAL CROSS SECTION DRAWING SHALL BE REFERRED.

LEGEND:

1) FRL – FINISHED ROAD LEVEL
2) EBL – EXISTING BED LEVEL
3) EJ – EXPANSION JOINT
4) ⊗ ▭ – POT PTFE BEARING
5) ⊗ ↑ – JACK POINT
6) TYP – TYPICAL
7) DC – DECK CONTINUES
8) GL – GROUND LEVEL

REFERENCE DRAWINGS: (LATEST REVISION)

N0533/E/MAJ/DD-006 & 007.... GENERAL ARRANGEMENT DRAWING FOR FLYOVER AT LAKE CROSSING (TYPICAL)
(SHEET-2 OF 3 & SHEET-3 OF 3)

THE DIMENSIONS SHOWN ARE FOR TENDER PURPOSE ONLY

NOTES:

DATE	No.	REVISION	DRAWN	PREPARED	CHECKED	APPROVED
24-12-25	R0	FIRST SUBMISSION	VSK	AGA	MD	MD

☑ APPROVAL ☐ CONSTRUCTION
☐ INFORMATION ☐ TENDER
☐ DRAFT ☐ PRELIMNARY

RELEASED FOR

GIS					
HIGHWAYS			MAJOR STRUCTURES		
ELECTRICAL			IRRIGATION/ WATER RESOURCES		
BUILDINGS			PHE / PLUMBING/ FIREFIGHTING		
ARCHITECTURE			MECHANICAL / HVAC		
CHECKED BY	SIGN	DATE	CHECKED BY	SIGN	DATE

FOR INTERNAL OFFICE ONLY

CONSULTANT
STUP Consultants Pvt. Ltd.
REGISTERED OFFICE : Unit No.2702, 27th Floor, Rupa Renaissance, P.No.D-33 & D-207, Juinagar, MIDC TTC Industrial Area, Turbhe, Navi Mumbai, Thane, Maharashtra-400705. Tel: +91 (022) 68067777, E-mail: mumbai@assystem.com
OFFICE OF ORIGIN : #69, JP & Devi Jambukeshwar Arcade 4th Floor, Millers Road Bengaluru - 560 052 Tel.: 080 - 40 39 79 79 Email : bangalore@assystem.com

OWNER: BANGALORE DEVELOPMENT AUTHORITY

CONTRACTOR:

PROJECT: CONSTRUCTION OF EIGHT LANE BENGALURU BUSINESS CORRIDOR (BBC)

TITLE: GENERAL ARRANGEMENT DRAWING FOR FLYOVER AT LAKE CROSSING (TYPICAL) (SHEET 1 OF 3)

DRG.NO.: N0533/E/MAJ/DD-005 (R0)

DATE: 24-12-2025
DRAWN: VSK
PREPARED: AGA
CHECKED: MD
APPROVED: MD
SCALE: AS SHOWN

DISCLAIMER: ONLY APPROVED AND SIGNED HARD COPIES SHALL BE USED FOR CONSTRUCTION

THIS DRAWING IS THE PROPERTY OF STUP CONSULTANTS Pvt. LTD. IT SHOULD NOT BE USED, COPIED, OR REPRODUCED WITHOUT THEIR WRITTEN PERMISSION.

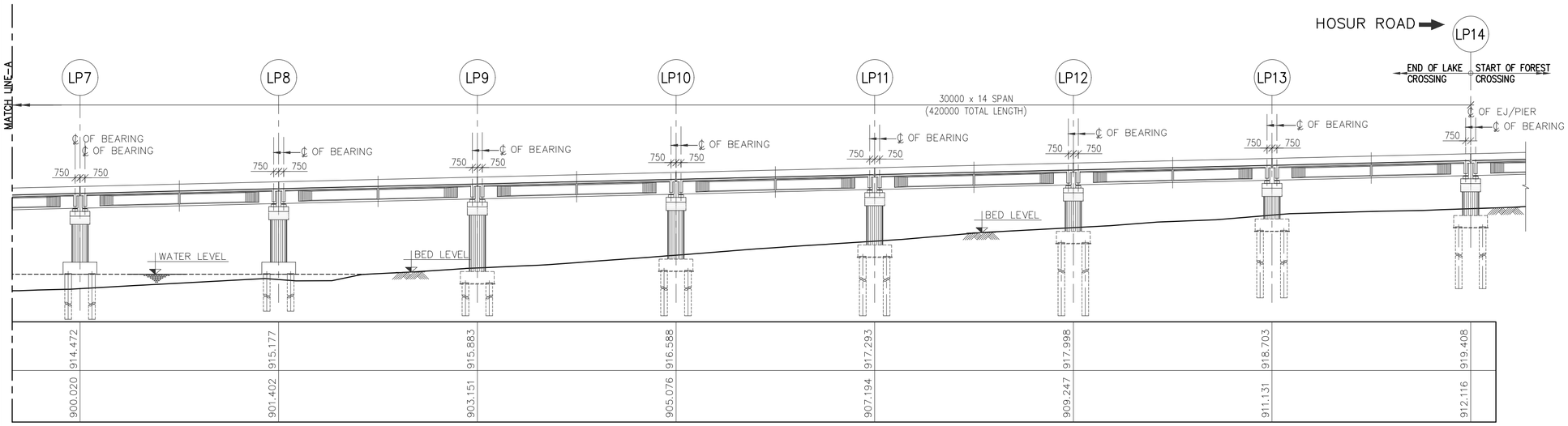

TYPICAL LONGITUDINAL SECTION
(SCALE 1:500)

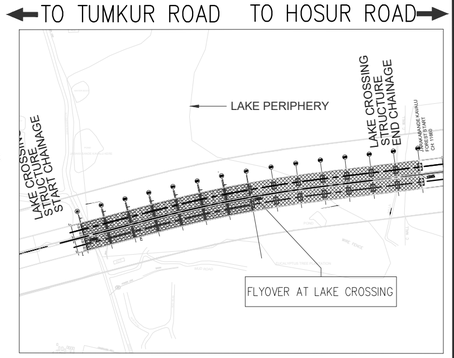

TYPICAL KEY PLAN
(SCALE 1:5000)

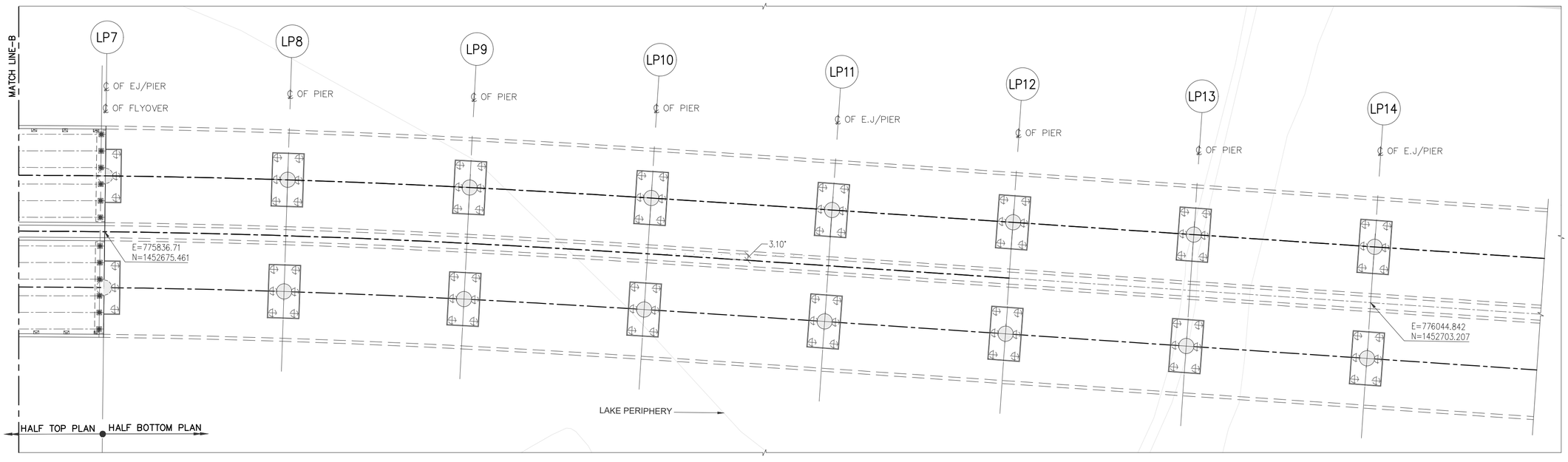

TYPICAL PLAN
(SCALE 1:500)

THE DIMENSIONS SHOWN ARE FOR TENDER PURPOSE ONLY

NOTES:

1. ALL DIMENSIONS ARE IN MILLIMETERS, LEVELS ARE IN METERS & CHAINAGES ARE IN KILOMETERS, UNLESS MENTIONED OTHERWISE.
2. DIMENSIONS ARE NOT TO BE SCALED OFF ONLY WRITTEN DIMENSIONS ARE TO BE FOLLOWED.

REFERENCE DRAWINGS: (LATEST REVISION)

N0533/E/MAJ/DD-005 & 007....GENERAL ARRANGEMENT DRAWING FOR FLYOVER AT LAKE CROSSING (TYPICAL) (SHEET-1 OF 3 & SHEET-3 OF 3)

DATE	No.	REVISION	DRAWN	PREPARED	CHECKED	APPROVED
24-12-25	R0	FIRST SUBMISSION	VSK	AGA	MD	MD

☑ APPROVAL ☐ CONSTRUCTION
☐ INFORMATION ☐ TENDER
☐ DRAFT ☐ PRELIMNARY

RELEASED FOR

GIS					
HIGHWAYS			MAJOR STRUCTURES		
ELECTRICAL			IRRIGATION/ WATER RESOURCES		
BUILDINGS			PHE / PLUMBING/ FIREFIGHTING		
ARCHITECTURE			MECHANICAL / HVAC		
CHECKED BY	SIGN	DATE	CHECKED BY	SIGN	DATE

FOR INTERNAL OFFICE ONLY

CONSULTANT
STUP Consultants Pvt. Ltd.
REGISTERED OFFICE : Unit No.2702, 27th Floor, Rupa Renaissance, P.No.D-33 & D-207, Juinagar, MIDC TTC Industrial Area, Turbhe, Navi Mumbai, Thane, Maharashtra-400705. Tel: +91 (022) 68067777, E-mail: mumbai@assystem.com
OFFICE OF ORIGIN : 8th, JF & Devi Jambukeshwar Arcade 4th Floor, Millers Road Bengaluru - 560 052 Tel.: 080 - 40 39 79 79 Email : bangalore@assystem.com

OWNER: BANGALORE DEVELOPMENT AUTHORITY

DATE: 24-12-2025

CONTRACTOR

DRAWN: VSK

PROJECT: CONSTRUCTION OF EIGHT LANE BENGALURU BUSINESS CORRIDOR (BBC)

PREPARED: AGA

CHECKED: MD

TITLE: GENERAL ARRANGEMENT DRAWING FOR FLYOVER AT LAKE CROSSING (TYPICAL) (SHEET 2 OF 3)

APPROVED: MD

DRG.NO.: N0533/E/MAJ/DD-006 (R0) (SHEET 2 OF 3)

SCALE: AS SHOWN

DISCLAIMER: ONLY APPROVED AND SIGNED HARD COPIES SHALL BE USED FOR CONSTRUCTION

THIS DRAWING IS THE PROPERTY OF STUP CONSULTANTS Pvt. LTD. IT SHOULD NOT BE USED, COPIED, OR REPRODUCED WITHOUT THEIR WRITTEN PERMISSION.

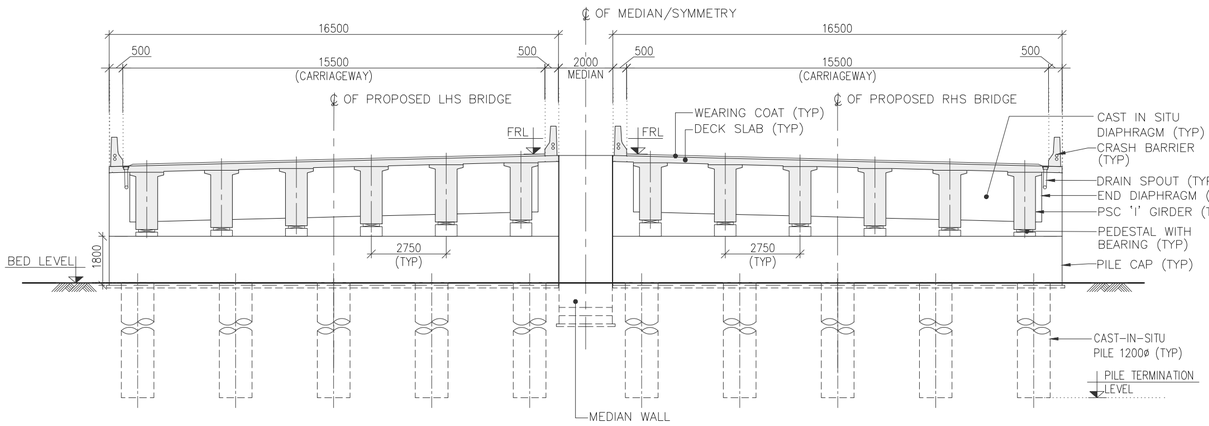

TYPICAL CROSS SECTION AT ABUTMENT A1
(SCALE 1:150)

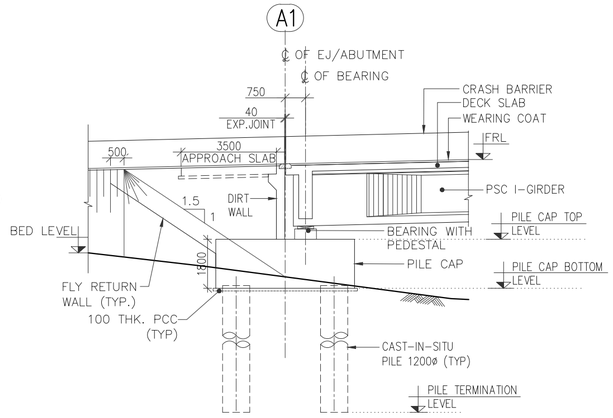

ELEVATION OF ABUTMENT A1
(SCALE 1:150)

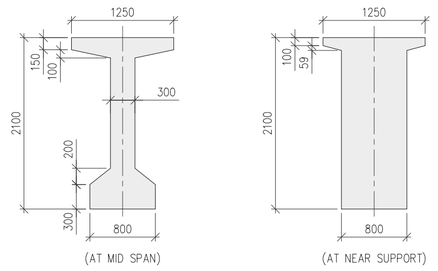

DETAIL OF PRECAST PSC GIRDER
(SCALE 1:50)

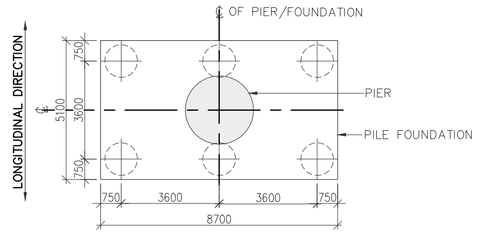

PLAN AT A–A
(SCALE 1:150)

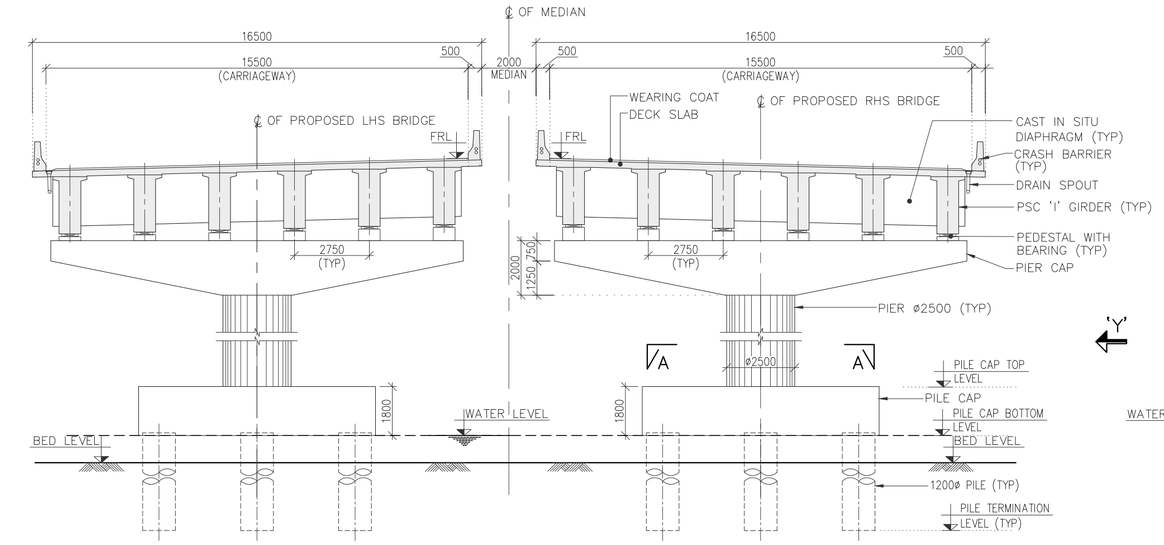

TYPICAL CROSS SECTION AT PIER
(SCALE 1:150)

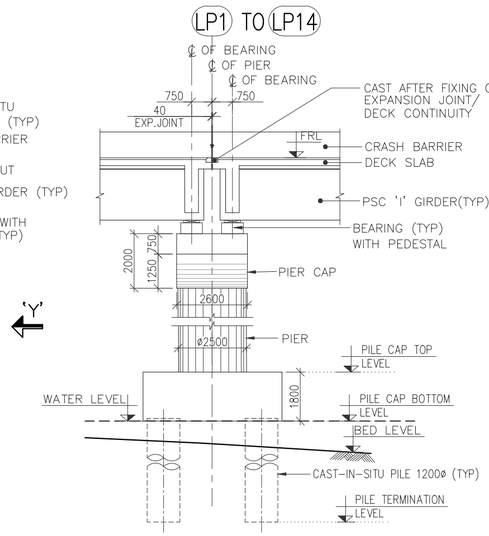

VIEW 'Y'
(SCALE 1:150)

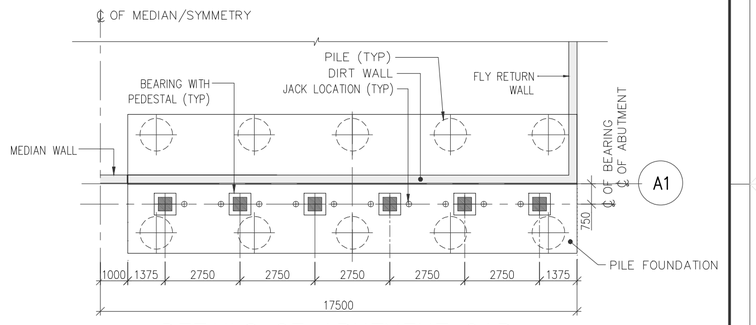

DETAILS OF ABUTMENT CAP
(SCALE 1:150)

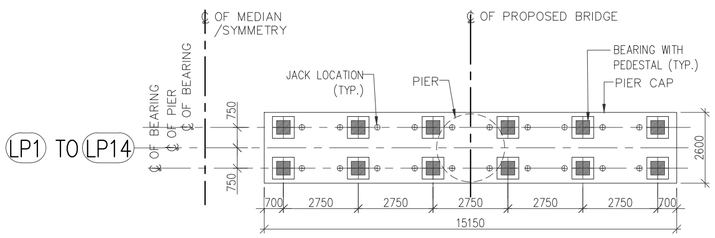

DETAILS OF PIER CAP
(SCALE 1:150)

THE DIMENSIONS SHOWN ARE FOR TENDER PURPOSE ONLY

NOTES:

1. ALL DIMENSIONS ARE IN MILLIMETERS, LEVELS ARE IN METERS & CHAINAGES ARE IN KILOMETERS, UNLESS MENTIONED OTHERWISE.
2. DIMENSIONS ARE NOT TO BE SCALED OFF ONLY WRITTEN DIMENSIONS ARE TO BE FOLLOWED.

REFERENCE DRAWINGS: (LATEST REVISION)

N0533/E/MAJ/DD–005 & 006.... GENERAL ARRANGEMENT DRAWING FOR FLYOVER AT LAKE CROSSING (TYPICAL) (SHEET–1 OF 3 & SHEET–2 OF 3)

DATE	No.	REVISION	DRAWN	PREPARED	CHECKED	APPROVED
24–12–25	R0	FIRST SUBMISSION	VSK	AGA	MD	MD

☑ APPROVAL ☐ CONSTRUCTION
☐ INFORMATION ☐ TENDER
☐ DRAFT ☐ PRELIMNARY

RELEASED FOR

GIS					
HIGHWAYS			MAJOR STRUCTURES		
ELECTRICAL			IRRIGATION/ WATER RESOURCES		
BUILDINGS			PHE / PLUMBING/ FIREFIGHTING		
ARCHITECTURE			MECHANICAL / HVAC		
CHECKED BY	SIGN	DATE	CHECKED BY	SIGN	DATE

FOR INTERNAL OFFICE ONLY

CONSULTANT: STUP Consultants Pvt. Ltd. (assystem stup)
REGISTERED OFFICE : Unit No.1702, 27th Floor, Rupa Renaissance, P.No.D–33 & D–207, Juinagar, MIDC TTC Industrial Area, Turbhe, Navi Mumbai, Thane, Maharashtra–400705. Tel: +91 (022) 68067777, E–mail: mumbai@assystem.com
OFFICE OF ORIGIN : #69, JP & Devi Jambukeshwar Arcade 4th Floor, Millers Road Bengaluru – 560 052 Tel.: 080 – 40 39 79 79 Email : bangalore@assystem.com

OWNER: BANGALORE DEVELOPMENT AUTHORITY
DATE: 24–12–2025
CONTRACTOR
DRAWN: VSK
PROJECT: CONSTRUCTION OF EIGHT LANE BENGALURU BUSINESS CORRIDOR (BBC)
PREPARED: AGA
CHECKED: MD
TITLE: GENERAL ARRANGEMENT DRAWING FOR FLYOVER AT LAKE CROSSING (TYPICAL) (SHEET 3 OF 3)
APPROVED: MD
DRG.NO.: N0533/E/MAJ/DD–007 (R0)
SCALE: AS SHOWN

DISCLAIMER: ONLY APPROVED AND SIGNED HARD COPIES SHALL BE USED FOR CONSTRUCTION

THIS DRAWING IS THE PROPERTY OF STUP CONSULTANTS Pvt. LTD. IT SHOULD NOT BE USED, COPIED, OR REPRODUCED WITHOUT THEIR WRITTEN PERMISSION.

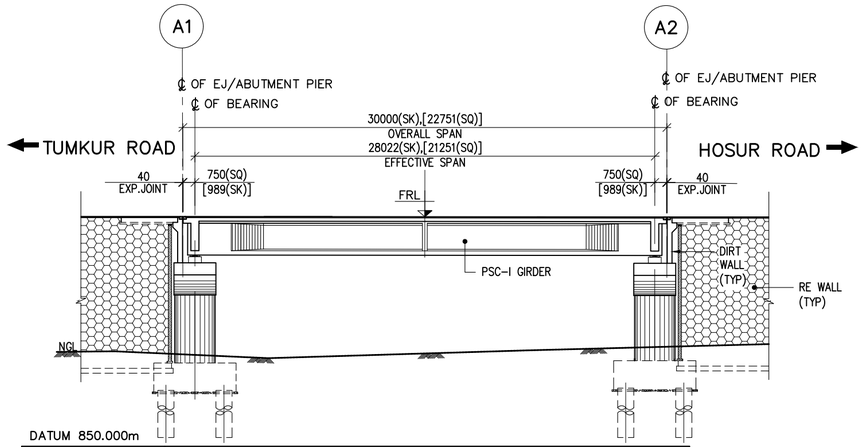

DATUM 850.000m

PROPOSED ROAD LEVEL ON C/L (m)	889.247	889.247	889.218
BED / GROUND LEVEL ON C/L (m)	880.704	880.759	881.175
CHAINAGE (m)	6860.0	6875.0	6890.0

LONGITUDINAL SECTION
(SCALE 1:250)

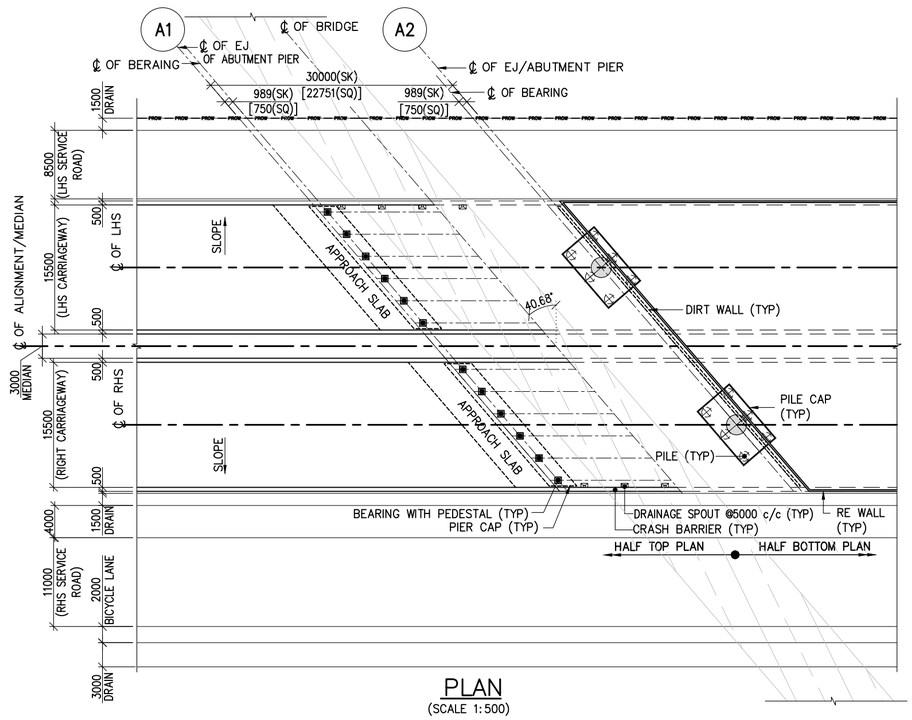

PLAN
(SCALE 1:500)

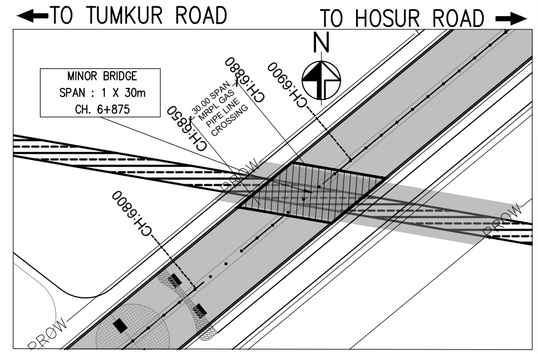

KEY PLAN
(SCALE 1:2000)

NOTES:

1. ALL THE DIMENSIONS ARE IN MILLIMETERS AND CHAINAGES ARE IN METERS
2. DIMENSIONS SHALL NOT BE SCALED OFF, ONLY WRITTEN DIMENSIONS SHALL BE FOLLOWED
3. GRADE OF CONCRETE SHALL BE FOLLOW AS:
   a) PSC SUPER STRUCTURE – M50
   b) PIER, PIER CAP & PEDESTAL – M45
   c) PILE & PILE CAP – M35
   d) CRASH BARRIER – M40
   e) APPROACH SLAB – M30
4. REINFORCEMENT SHALL BE HIGH STRENGTH DEFORMED BARS OF GRADE Fe500D CONFORMING TO IS:1786–2008 HAVING MINIMUM ELONGATION 14.5%
5. ALL BEARINGS ARE POT CUM PTFE TYPE.
6. EXPANSION JOINTS ARE WITH STRIP SEAL TYPE.
7. PERMANENT LINERS SHALL BE PROVIDED FOR PILES EXPOSED TO AGGRESSIVE SOIL.
8. DIMENSION OF STRUCTURAL MEMBERS SHOWN ARE INDICATIVE ONLY WHICH SHALL BE CONSIDERED BASED ON DETAILED DESIGN.
9. ABOVE DETAILS ARE OF TYPICAL NATURE TO INDICATE THE TYPE OF STRUCTURE AND SPACING OF STRUCTURAL MEMBER. ACTUAL CONSTRUCTION DESIGN MAY BE DIFFERENT BASED ON SITE CONDITIONS.
10. PILE CAPACITY CONSIDERED AS 375T FOR 1.2 DIA PILE OF 25M LENGTH FOR FOUNDATION DESIGN.
11. FOR CAMBER/SUPERELEVATION AND CROSS SECTION OF HIGHWAY AT SPECIFIC STRUCTURE LOCATIONS, RELEVANT TYPICAL CROSS SECTION DRAWING SHALL BE REFERRED.
12. ALL THE DIMESNIONS MENTIONED ARE SQUARE UNLESS STATED OTHERWISE.

LEGEND:

1) FRL – FINISHED ROAD LEVEL
2) EJ – EXPANSION JOINT
3) ⊗ ↑ – JACK POINT
4) TYP – TYPICAL
5) NGL – NATURAL GROUND LEVEL

REFERENCE DRAWINGS: (LATEST REVISION)

N0533/E/MAJ/DD–102.... GENERAL ARRANGEMENT FOR MINOR BRIDGE AT CH 6+875 FOR MRCL PIPE LINE (SHEET 2 OF 2).

THE DIMENSIONS SHOWN ARE FOR TENDER PURPOSE ONLY

NOTES:

DATE	No.	REVISION	DRAWN	PREPARED	CHECKED	APPROVED
07–01–26	R0	FIRST SUBMISSION	SSA	AGA	MD	MD

☑ APPROVAL ☐ CONSTRUCTION
☐ INFORMATION ☐ TENDER
☐ DRAFT ☐ PRELIMNARY

RELEASED FOR

GIS						
HIGHWAYS			MAJOR STRUCTURES			
ELECTRICAL			IRRIGATION/ WATER RESOURCES			
BUILDINGS			PHE / PLUMBING/ FIREFIGHTING			
ARCHITECTURE			MECHANICAL / HVAC			
CHECKED BY	SIGN	DATE	CHECKED BY	SIGN	DATE	

FOR INTERNAL OFFICE ONLY

CONSULTANT: STUP Consultants Pvt. Ltd.
REGISTERED OFFICE : Unit No.2705, 27th Floor, Rupa Renaissance, P.No.D–33 & D–207, Juinagar, MIDC TTC Industrial Area, Turbhe, Navi Mumbai, Thane, Maharashtra–400705. Tel: +91 (022) 68067777, E–mail: mumbai@asystem.com
OFFICE OF ORIGIN : #69, JP & Devi Jambukeshwar Arcade 4th Floor, Millers Road Bengaluru – 560 052 Tel.: 080 – 40 39 79 79 Email : bangalore@asystem.com
OWNER: BANGALORE DEVELOPMENT AUTHORITY
CONTRACTOR:
PROJECT: CONSTRUCTION OF EIGHT LANE BENGALURU BUSINESS CORRIDOR (BBC)
TITLE: GENERAL ARRANGEMENT FOR MINOR BRIDGE AT CH 6+875 Km FOR MRCL PIPE LINE (SHEET 1 OF 2)
DRG.NO.: N0533/E/MAJ/DD–101 (R0)

DATE	07–01–2026
DRAWN	SSA
PREPARED	AGA
CHECKED	MD
APPROVED	MD
SCALE:	AS SHOWN

DISCLAIMER: ONLY APPROVED AND SIGNED HARD COPIES SHALL BE USED FOR CONSTRUCTION

THIS DRAWING IS THE PROPERTY OF STUP CONSULTANTS Pvt. LTD. IT SHOULD NOT BE USED, COPIED, OR REPRODUCED WITHOUT THEIR WRITTEN PERMISSION.

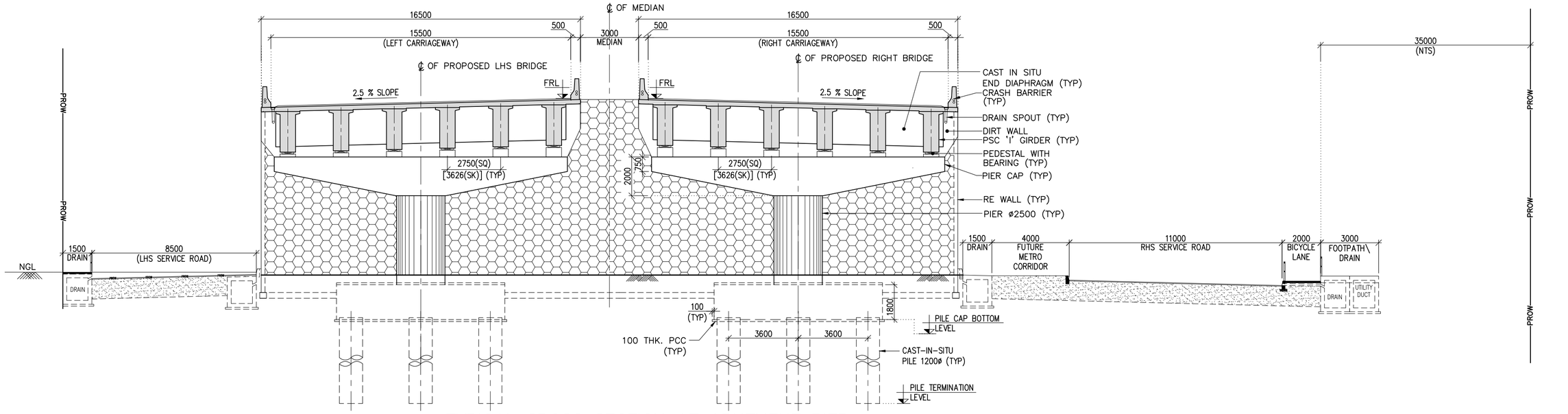

TYPICAL CROSS SECTION AT ABUTMENT PIER

(SCALE 1:150)

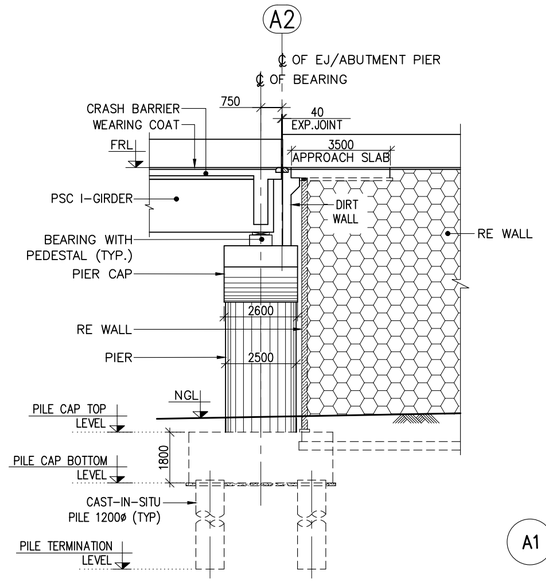

ELEVATION OF ABUTMENT PIER

(SCALE 1:150)

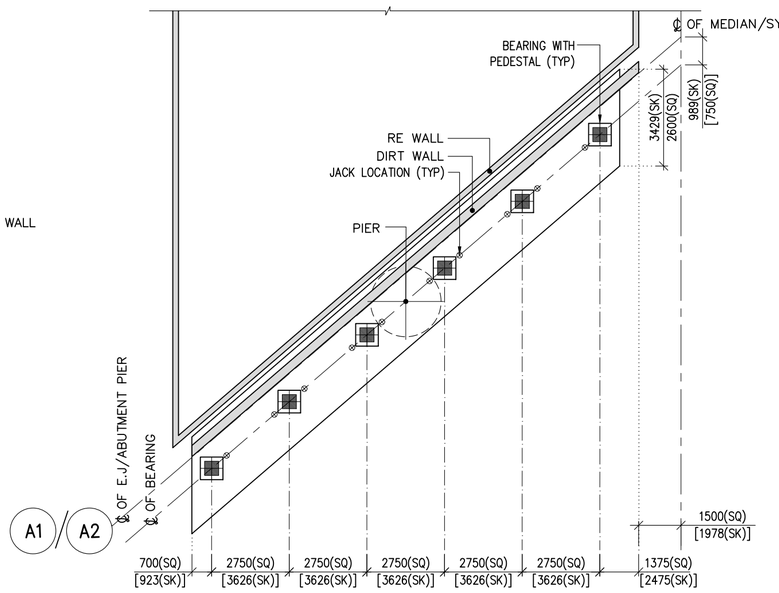

DETAILS OF ABUTMENT PIER CAP

(SCALE 1:150)

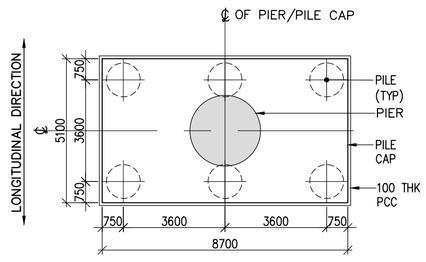

PLAN AT A–A

(SCALE 1:150)

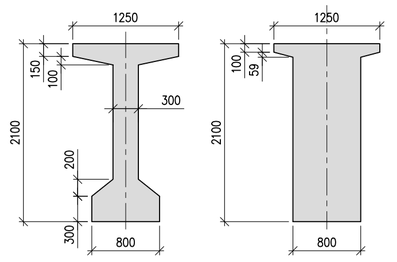

DETAIL OF PRECAST PSC GIRDER

(SCALE 1:50)

THE DIMENSIONS SHOWN ARE FOR TENDER PURPOSE ONLY

NOTES:

1. ALL DIMENSIONS ARE IN MILLIMETERS, LEVELS ARE IN METERS & CHAINAGES ARE IN KILOMETERS, UNLESS MENTIONED OTHERWISE.
2. DIMENSIONS ARE NOT TO BE SCALED OFF ONLY WRITTEN DIMENSIONS ARE TO BE FOLLOWED.

REFERENCE DRAWINGS: (LATEST REVISION)

N0533/E/MAJ/DD–101.... GENERAL ARRANGEMENT FOR MINOR BRIDGE AT CH 6+875 FOR MRCL PIPE LINE (SHEET 1 OF 2)

DATE	No.	REVISION	DRAWN	PREPARED	CHECKED	APPROVED
07–01–26	R0	FIRST SUBMISSION	SSA	AGA	MD	MD

☑ APPROVAL ☐ CONSTRUCTION
☐ INFORMATION ☐ TENDER
☐ DRAFT ☐ PRELIMNARY

RELEASED FOR

GIS						
HIGHWAYS			MAJOR STRUCTURES			
ELECTRICAL			IRRIGATION/ WATER RESOURCES			
BUILDINGS			PHE / PLUMBING/ FIREFIGHTING			
ARCHITECTURE			MECHANICAL / HVAC			
CHECKED BY	SIGN	DATE	CHECKED BY	SIGN	DATE	

FOR INTERNAL OFFICE ONLY

CONSULTANT
STUP Consultants Pvt. Ltd.
REGISTERED OFFICE : Unit No.2702, 27th Floor, Rupa Renaissance, P.No.D–33 & D–207, Juinagar, MDC TTC Industrial Area, Turbhe, Navi Mumbai, Thane, Maharashtra– 400705 Tel: +91 (022) 68067777, E–mail: mumbai@assystem.com
OFFICE OF ORIGIN : #69, JP & Devi Jambukeshwar Arcade 4th Floor, Millers Road Bengaluru – 560 052 Tel.: 080 – 40 39 79 79 Email : bangalore@assystem.com

OWNER: BANGALORE DEVELOPMENT AUTHORITY

CONTRACTOR

PROJECT: CONSTRUCTION OF EIGHT LANE BENGALURU BUSINESS CORRIDOR (BBC)

TITLE: GENERAL ARRANGEMENT FOR MINOR BRIDGE AT CH 6+875 Km FOR MRCL PIPE LINE (SHEET 2 OF 2)

DRG.NO.: N0533/E/MAJ/DD–102 (R0)

DATE: 07–01–2026
DRAWN: SSA
PREPARED: AGA
CHECKED: MD
APPROVED: MD
SCALE: AS SHOWN

DISCLAIMER: ONLY APPROVED AND SIGNED HARD COPIES SHALL BE USED FOR CONSTRUCTION

THIS DRAWING IS THE PROPERTY OF STUP CONSULTANTS Pvt. LTD. IT SHOULD NOT BE USED, COPIED, OR REPRODUCED WITHOUT THEIR WRITTEN PERMISSION.

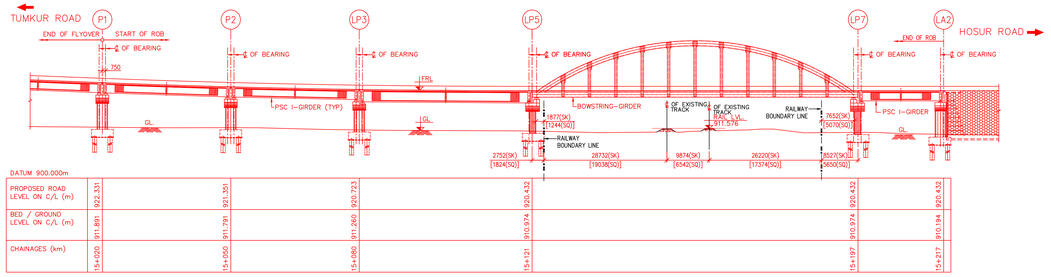

ELEVATION SHOW AS PER CENTER LINE OF ALIGNMENT
(SCALE 1:500)

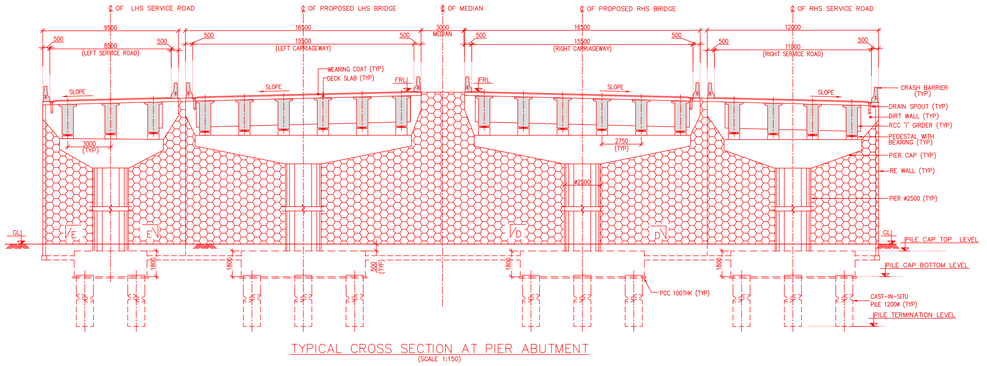

TYPICAL CROSS SECTION AT PIER ABUTMENT
(SCALE 1:150)

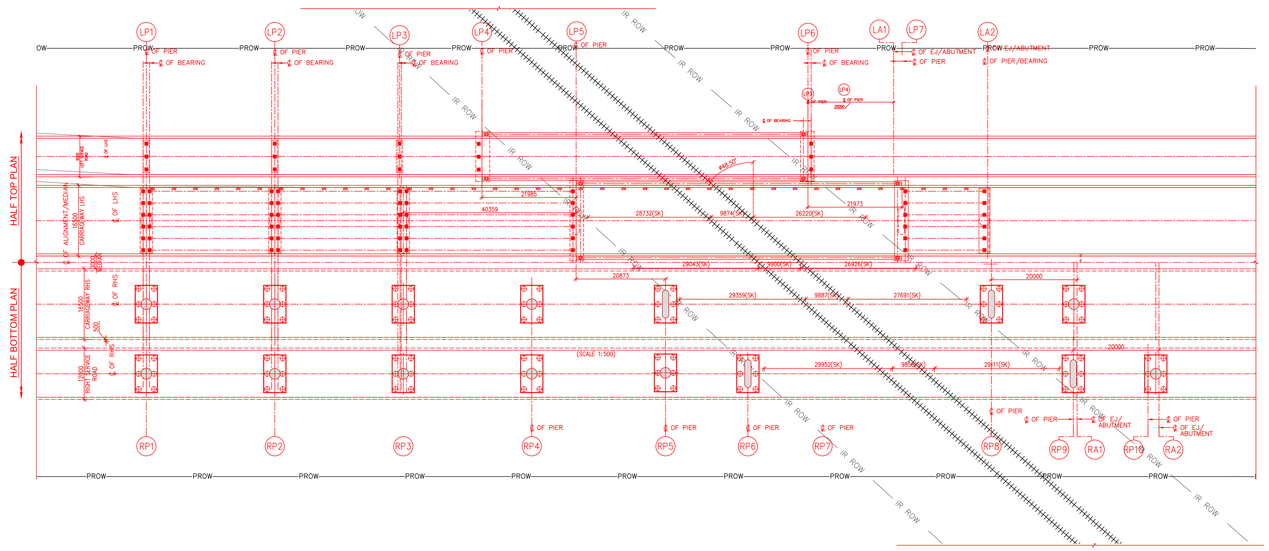

PLAN
(SCALE 1:500)

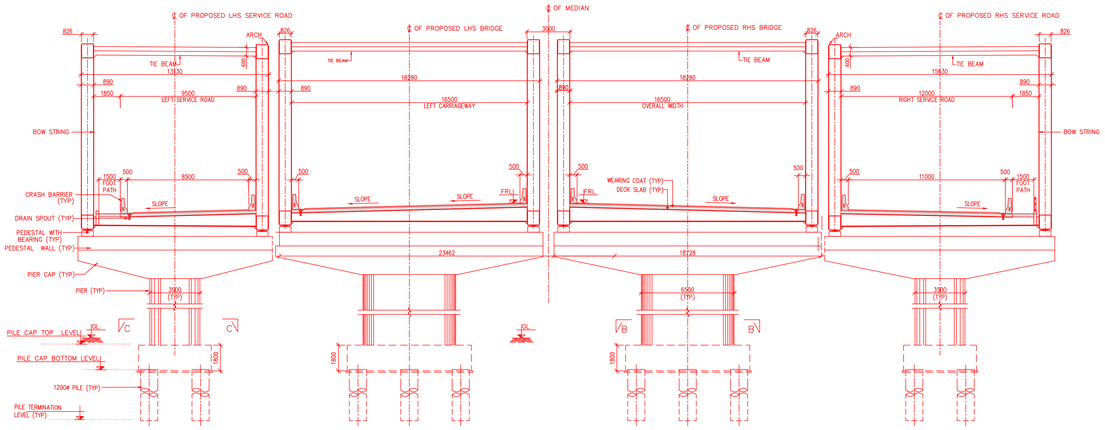

TYPICAL CROSS SECTION AT PIER
(SCALE 1:150)

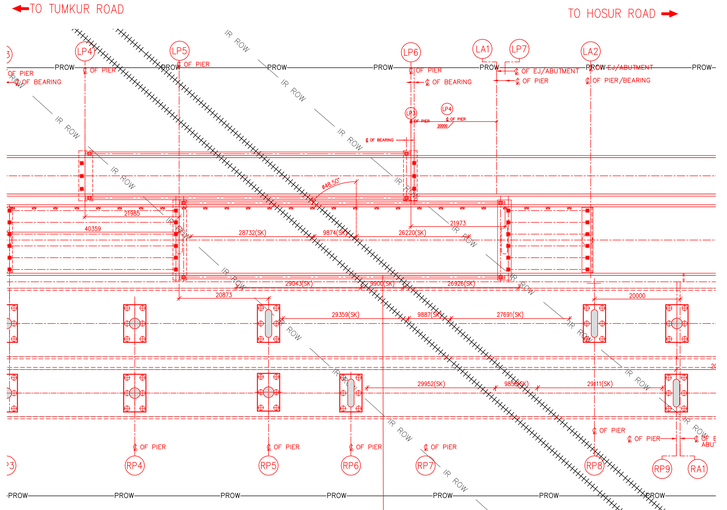

KEY PLAN
(SCALE 1:2000)

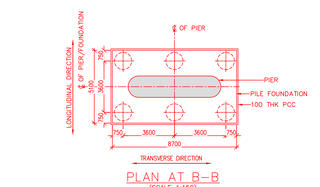

PLAN AT B-B
(SCALE 1:150)

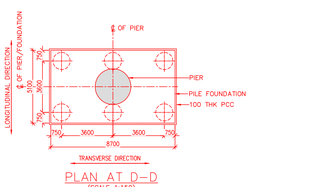

PLAN AT D-D
(SCALE 1:150)

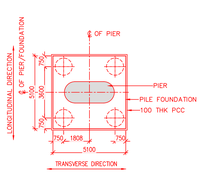

PLAN AT C-C
(SCALE 1:150)

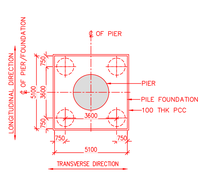

PLAN AT E-E
(SCALE 1:150)

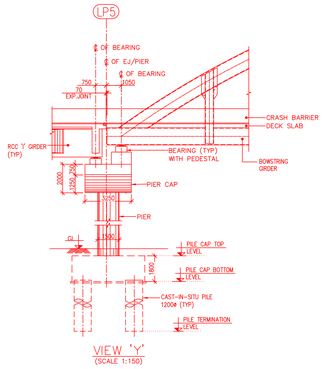

VIEW 'Y'
(SCALE 1:150)

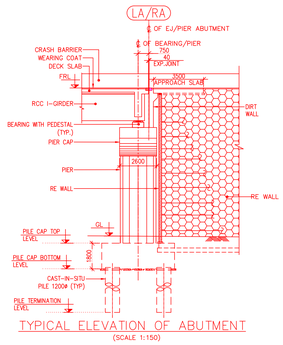

TYPICAL ELEVATION OF ABUTMENT
(SCALE 1:150)

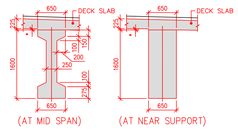

CROSS SECTION OF RCC 'I' GIRDER FOR 20m SPAN
(SCALE 1:50)

NOTES:

1. ALL DIMENSIONS ARE IN MILLIMETERS AND LEVELS IN METERS UNLESS WRITTEN OTHERWISE.
2. NO DIMENSIONS SHALL BE SCALED FROM THIS DRAWING, ONLY WRITTEN DIMENSIONS SHALL BE FOLLOWED.
3. ACTUAL LOCATION OF ROB SHALL BE DECIDED BY RLY. ENGINEER-IN-CHARGE IN CONSULTATION WITH ROAD AUTHORITIES AT THE TIME OF ITS CONSTRUCTION.
4. ACTUAL DEPTH OF FOUNDATION SHALL BE DECIDED BY ENGINEER-IN-CHARGE TO SUIT THE SOIL STRATA MET WITH AT THE SITE. ENGINEER-IN-CHARGE SHOULD ENSURE REQUIRE PILE CAPACITY.
5. CRASH BARRIER SHALL BE PROVIDED AS PER MORTH STANDARDS.
6. MIN GRADE OF CONCRETE
   a) PSC SUPERSTRUCTURE – M45 b) RCC DECK SLAB – M40
   c) RCC ABUTMENT – M35 d) BEARING PEDESTALS – M40
   e) RCC CRASH BARRIER – M40 f) APPROACH SLAB – M30
7. REINFORCEMENT SHALL BE HIGH STRENGTH DEFORMED BARS OF GRADE Fe500D CONFORMING TO IS:1786–2008 HAVING MINIMUM ELONGATION 14.5%.
8. THE BRIDGE SHALL BE DESIGNED FOR FOUR LANES OF IRC CLASS "A" LOADING OR ONE LANES OF CLASS 70R FOR EVERY TWO LANE AND SPECIAL VEHICLE LOADING OF 385 TONS SHALL BE CONSIDERED AS PER IRC:6–2017.
9. ALL STEEL PLATES USED IN FABRICATION OF THIS BRIDGE ARE OF GRADE E 350.
10. DESIGN OF ROB AND ALL RC WORKS SHALL CONFORM TO RELEVANT LATEST IRC & I.S. CODES OF PRACTICE.
11. SUITABLE DRAINAGE ARRANGEMENTS INSIDE AND OUTSIDE THE RAILWAY LIMITS ARE TO BE PROVIDED AND MAINTAINED BY THE ROAD AUTHORITY.
12. EXPANSION JOINTS (STRIP SEAL TYPE) SHOULD BE PROVIDED OF APPROVED QUALITY AS PER MORTH SPECIFICATIONS. CONTRACTOR SHOULD FURNISH DESIGN/DRAWINGS OF EXPANSION JOINT FROM FIRM APPROVED BY MORTH/MOST, AT VARIOUS RELEVANT AMBIENT TEMPERATURES TO SUIT SITE CONDITIONS WITH APPROVED OF ENGINEER INCHARGE.
13. ALL PROPOSED WORK ARE SHOWN IN RED EXISTING WORKS ARE SHOWN IN BLACK AND FUTURE WORKS ARE SHOWN IN GREEN.
14. BACK FILL BEHIND ABUTMENT SHALL BE DONE WITH SELECTED MATERIALS HAVING C=0 AND ϕ NOT LESS THAN 30.
15. TEMPORARY SPEED RESTRICTION MAY BE IMPOSED DURING EXECUTION OF WORK WITH APPROVAL OF DIVISIONAL ENGINEER.
16. ANALYSIS AND DESIGN FOR COMPOSITE CONCRETE DECK IS AS PER IRC:22–2015.
17. THE DESIGN AND CONSTRUCTION SHALL CONFIRM TO THE CRITERIA LAID DOWN IN THE LATEST EDITIONS OF THE FOLLOWING CODES AND STANDARD SPECIFICATIONS:
    i) IRC STANDARD SPECIFICATIONS AND CODES OF PRACTICES FOR ROAD BRIDGES SUCH AS; IRC 5–2015, IRC 6–2017, IRC 78– 2014, IRC 112–2020.
    ii) SPECIFICATION FOR ROAD AND BRIDGES WORKS BY MORTAH.
    iii) R.D.S.O DESIGN AND DRAWINGS OF MINISTRY OF RAILWAY.
18. ALL MATERIAL SHALL PASS TEST/ANALYSIS PRESCRIBED BY RELEVANT IS SPECIFICATIONS.

LEGEND:

1) FRL – FINISHED ROAD LEVEL
2) EBL – EXISTING BED LEVEL
3) EJ – EXPANSION JOINT
4) – POT PTFE BEARING
5) – JACK POINT
6) TYP – TYPICAL
7) DC – DECK CONTINUES
8) GL – GROUND LEVEL
9) LA – LEFT ABUTMENT
10) RA – RIGHT ABUTMENT
11) LP – LEFT PIER
12) RP – RIGHT PIER

RDSO DRAWING REFERENCE

RDSO/B–10425 (SERIES) – BOW STRING STEEL GIRDER OF 72.00m CLEAR SPAN

NOTES:

DATE	No.	REVISION	DRAWN	PREPARED	CHECKED	APPROVED
17–01–26	R0	FIRST SUBMISSION	SST	AGA	MD	MD

☑ APPROVAL	☐ CONSTRUCTION		
☐ INFORMATION	☐ TENDER		
☐ DRAFT	☐ PRELIMINARY		

RELEASED FOR

GIS			
HIGHWAYS		MAJOR STRUCTURES	
ELECTRICAL		IRRIGATION/ WATER RESOURCES	
BUILDINGS		PHE / PLUMBING/ FIREFIGHTING	
ARCHITECTURE		MECHANICAL / HVAC	

CHECKED BY	SIGN	DATE	CHECKED BY	SIGN	DATE
FOR INTERNAL OFFICE ONLY					

CONSULTANT
STUP Consultants Pvt. Ltd.
Engineering Consultants
DESIGNED, CHECKED & APPROVED BY STUP CONSULTANTS PVT. LTD.
No. 3rd & 4th Floor, Sri Ram Arcade Building, Kodihalli, Old Airport Road, Bengaluru - 560 008.
Tel: +91 - 80 - 25 70 70 70
Email: mail@stupconsultants.com

OWNER: BANGALORE DEVELOPMENT AUTHORITY

DATE: 17–01–26

CONTRACTOR

PROJECT: CONSTRUCTION OF EIGHT LANE BENGALURU BUSINESS CORRIDOR (BBC).

TITLE: GENERAL ARRANGEMENT DRAWING FOR ROB FROM CH 15+020 TO CH 15+274 KM

DRG.NO.: N0533/E/MAJ/DD–202(R0)

DRAWN	SST
PREPARED	AGA
CHECKED	MD
APPROVED	MD
SCALE:	AS SHOWN

DISCLAIMER: ONLY APPROVED AND SIGNED HARD COPIES SHALL BE USED FOR CONSTRUCTION

THIS DRAWING IS THE PROPERTY OF STUP CONSULTANTS Pvt. LTD. IT SHOULD NOT BE USED, COPIED, OR REPRODUCED WITHOUT THEIR WRITTEN PERMISSION.

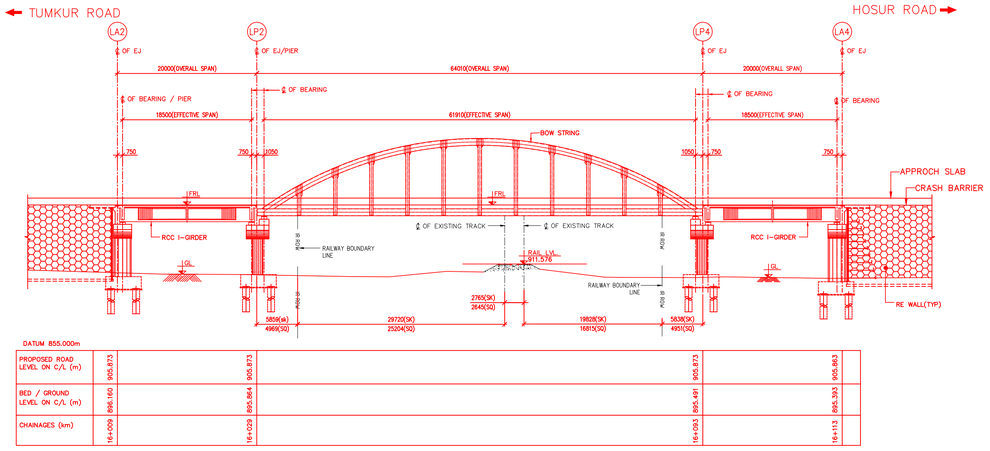

DATUM 855.000m					
PROPOSED ROAD LEVEL ON C/L (m)	905.873	905.873	905.873	905.873	905.863
BED / GROUND LEVEL ON C/L (m)	896.160	895.864	895.864	895.491	895.393
CHAINAGES (km)	16+009	16+029	16+093	16+093	16+113

ELEVATION SHOW AS PER CENTER LINE OF ALIGNMENT
(SCALE 1:300)

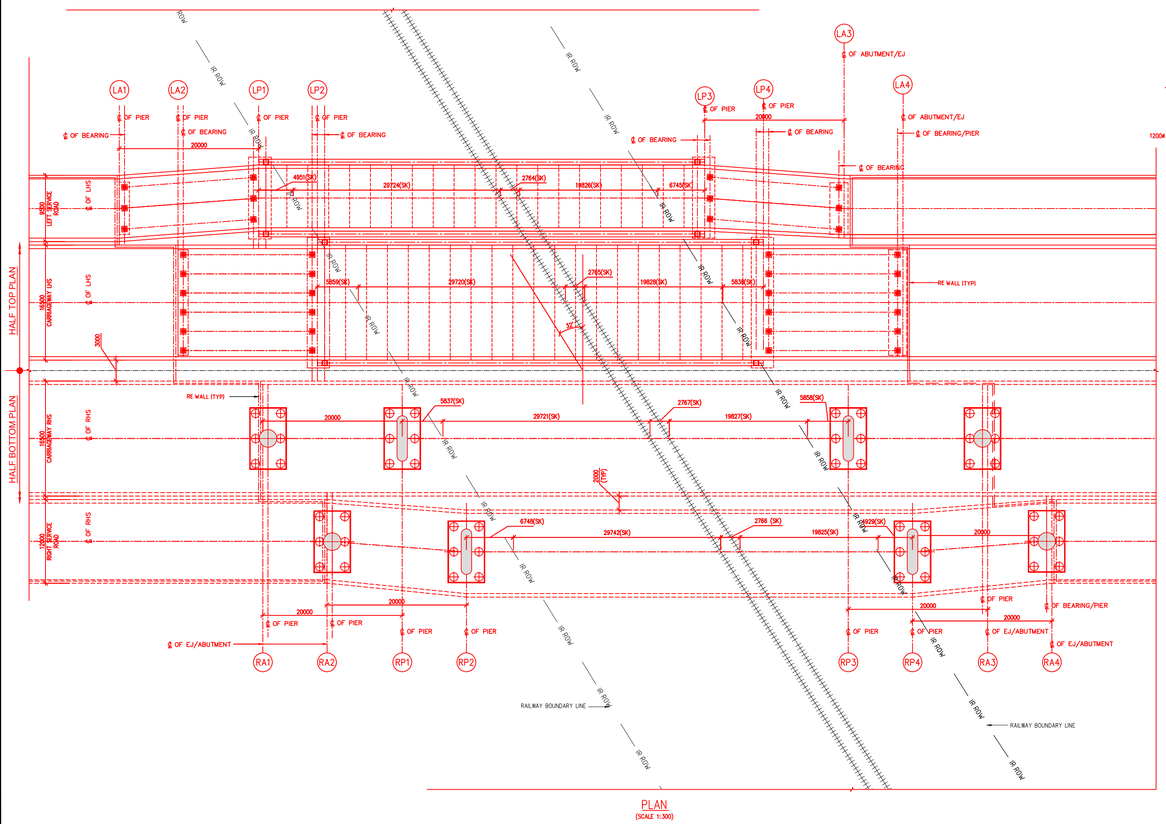

PLAN
(SCALE 1:300)

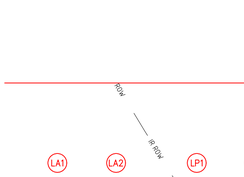

PLAN AT B-B
(SCALE 1:50)

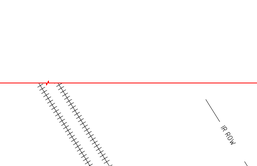

PLAN AT D-D
(SCALE 1:50)

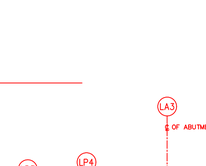

PLAN AT C-C
(SCALE 1:50)

PLAN AT E-E
(SCALE 1:50)

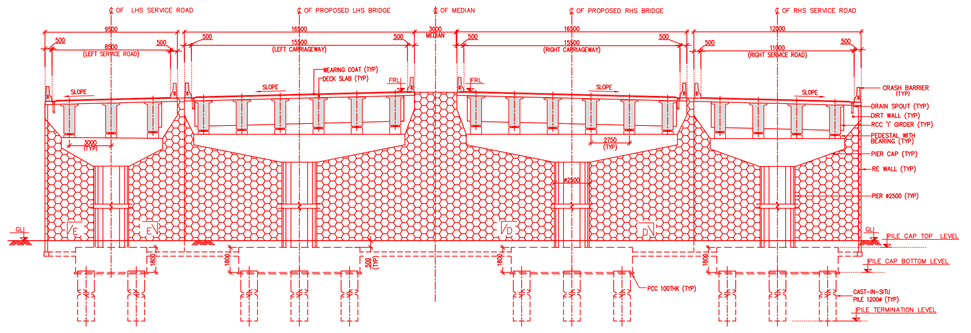

TYPICAL CROSS SECTION AT PIER ABUTMENT
(SCALE 1:50)

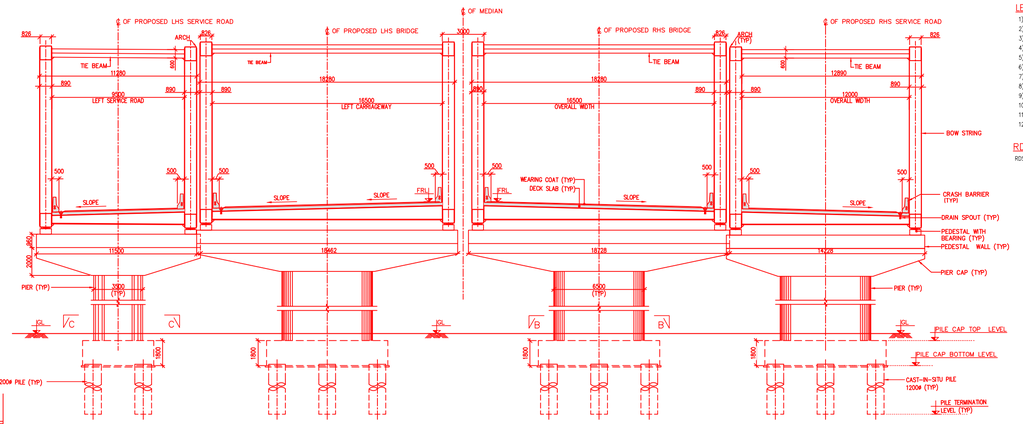

TYPICAL CROSS SECTION AT PIER
(SCALE 1:50)

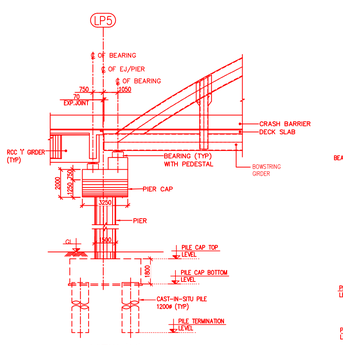

VIEW 'Y'
(SCALE 1:150)

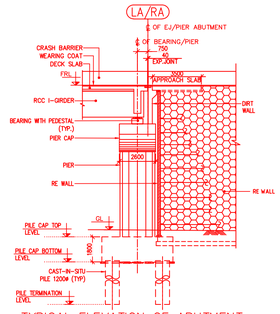

TYPICAL ELEVATION OF ABUTMENT
(SCALE 1:150)

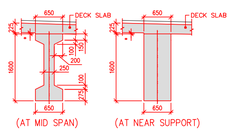

CROSS SECTION OF RCC 'I' GIRDER FOR 20m SPAN
(SCALE 1:50)

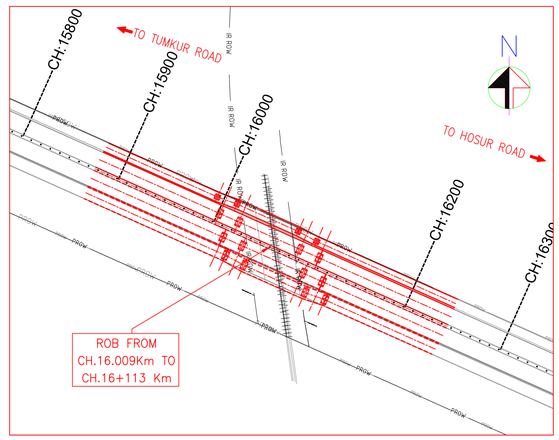

KEY PLAN
(SCALE 1:2000)

NOTES:

1. ALL DIMENSIONS ARE IN MILLIMETERS AND LEVELS IN METERS UNLESS WRITTEN OTHERWISE.
2. NO DIMENSIONS SHALL BE SCALED FROM THIS DRAWING, ONLY WRITTEN DIMENSIONS SHALL BE FOLLOWED.
3. ACTUAL LOCATION OF ROB SHALL BE DECIDED BY RLY. ENGINEER-IN-CHARGE IN CONSULTATION WITH ROAD AUTHORITIES AT THE TIME OF ITS CONSTRUCTION.
4. ACTUAL DEPTH OF FOUNDATION SHALL BE DECIDED BY ENGINEER-IN-CHARGE TO SUIT THE SOIL STRATA MET WITH AT THE SITE. ENGINEER-IN-CHARGE SHOULD ENSURE REQUIRE PILE CAPACITY.
5. CRASH BARRIER SHALL BE PROVIDED AS PER MORTH STANDARDS.
6. MIN GRADE OF CONCRETE
   a) PSC SUPERSTRUCTURE – M45 b) RCC DECK SLAB – M40
   c) RCC ABUTMENT – M35 d) BEARING PEDESTALS – M40
   e) RCC CRASH BARRIER – M40 f) APPROACH SLAB – M30
7. REINFORCEMENT SHALL BE HIGH STRENGTH DEFORMED BARS OF GRADE Fe5000 CONFORMING TO IS:1786-2008 HAVING MINIMUM ELONGATION 14.5%.
8. THE BRIDGE SHALL BE DESIGNED FOR FOUR LANES OF IRC CLASS "A" LOADING OR ONE LANES OF CLASS 70R FOR EVERY TWO LANE AND SPECIAL VEHICLE LOADING OF 385 TONS SHALL BE CONSIDERED AS PER IRC6-2017.
9. ALL STEEL PLATES USED IN FABRICATION OF THIS BRIDGE ARE OF GRADE E 350.
10. DESIGN OF ROB AND ALL RC WORKS SHALL CONFORM TO RELEVANT LATEST IRC & I.S. CODES OF PRACTICE.
11. SUITABLE DRAINAGE ARRANGEMENTS INSIDE AND OUTSIDE THE RAILWAY LIMITS ARE TO BE PROVIDED AND MAINTAINED BY THE ROAD AUTHORITY.
12. EXPANSION JOINTS (STRIP SEAL TYPE) SHOULD BE PROVIDED OF APPROVED QUALITY AS PER MORTH SPECIFICATIONS. CONTRACTOR SHOULD FURNISH DESIGN/DRAWINGS OF EXPANSION JOINT FROM FIPM APPROVED BY MORTH/WDST, AT VARIOUS RELEVANT AMBIENT TEMPERATURES TO SUIT SITE CONDITIONS WITH APPROVED OF ENGINEER INCHARGE.
13. ALL PROPOSED WORK ARE SHOWN IN RED EXISTING WORKS ARE SHOWN IN BLACK AND FUTURE WORKS ARE SHOWN IN GREEN.
14. BACK FILL BEHIND ABUTMENT SHALL BE DONE WITH SELECTED MATERIALS HAVING C=0 AND Φ NOT LESS THAN 30.
15. TEMPORARY SPEED RESTRICTION MAY BE IMPOSED DURING EXECUTION OF WORK WITH APPROVAL OF DIVISIONAL ENGINEER.
16. ANALYSIS AND DESIGN FOR COMPOSITE CONCRETE DECK IS AS PER IRC:22-2015.
17. THE DESIGN AND CONSTRUCTION SHALL CONFIRM TO THE CRITERIA LAID DOWN IN THE LATEST EDITIONS OF THE FOLLOWING CODES AND STANDARD SPECIFICATIONS:
   i) IRC STANDARD SPECIFICATIONS AND CODES OF PRACTICES FOR ROAD BRIDGES SUCH AS; IRC 5-2015, IRC 6-2017, IRC 78- 2014, IRC 112-2020.
   ii) SPECIFICATION FOR ROAD AND BRIDGES WORKS BY MORT&H.
   iii) R.D.S.O DESIGN AND DRAWINGS OF MINISTRY OF RAILWAY.
18. ALL MATERIAL SHALL PASS TEST/ANALYSIS PRESCRIBED BY RELEVANT IS SPECIFICATIONS.

LEGEND:

1) FRL – FINISHED ROAD LEVEL
2) EBL – EXISTING BED LEVEL
3) EJ – EXPANSION JOINT
4) ⊙ ▭ – POT PTFE BEARING
5) ⊙ ↑ – JACK POINT
6) TYP – TYPICAL
7) DC – DECK CONTINUES
8) GL – GROUND LEVEL
9) LA – LEFT ABUTMENT
10) RA – RIGHT ABUTMENT
11) LP – LEFT PIER
12) RP – RIGHT PIER

RDSO DRAWING REFERENCE

RDSO/B-10425 (SERIES) – BOW STRING STEEL GIRDER OF 64.00m CLEAR SPAN

NOTES:

No	DATE	REVISION	DRAWN	PREPARED	CHECKED	APPROVED
R0	17-01-26	FIRST SUBMISSION	SST	AGA	MD	MD

☑ APPROVAL ☐ CONSTRUCTION
☐ INFORMATION ☐ TENDER
☐ DRAFT ☐ PRELIMINARY

RELEASED FOR

GIS					
HIGHWAYS			MAJOR STRUCTURES		
ELECTRICAL			IRRIGATION/ WATER RESOURCES		
BUILDINGS			PHE / PLUMBING / TUNNELING		
ARCHITECTURE			PROJECT MANAGEMENT /		
CHECKED BY	SIGN	DATE	CHECKED BY	SIGN	DATE

FOR INTERNAL OFFICE ONLY

CONSULTANT
STUP Consultants Pvt. Ltd.
REGISTERED OFFICE: No. 8, Dr. M.H. Marigowda Road, Opp. Hotel Lalith Ashok, Next to Treasury Bldg., Bengaluru - 560 052. Ph: +91 80 2226 7878 / 79 Fax: +91 80 2226 78 78 E-mail: mail@stupindia.com
OFFICE OF ORIGIN: No. 41 & 42, 3rd Main Road, Kumaraswamy Layout, Bengaluru - 560 078. Ph: +91 80 26 78 78 E-mail: mail@stupindia.com

CLIENT
BANGALORE DEVELOPMENT AUTHORITY

CONTRACTOR

PROJECT
CONSTRUCTION OF EIGHT LANE BENGALURU BUSINESS CORRIDOR (BBC)

TITLE
GENERAL ARRANGEMENT DRAWING FORROB FROM CH.16.009Km TO CH.16+113 Km

DRG.NO.: N0533/E/MAJ/DD-203

DATE: 17/01/2026
DRAWN: SST
PREPARED: AGA
CHECKED: MD
APPROVED: MD
SCALE: AS SHOWN

DATUM=848.000m

PROPOSED ROAD LEVEL ON C/L (m)	873.919		873.919		873.919		873.919		873.919
GROUND LEVEL ON C/L (m)	865.868		865.270		864.043		864.062		863.272
CHAINAGES (km)	4+158.72		4+196.00		4+211.86		4+242.00		4+265.00

LONGITUDINAL ELEVATION
(SCALE 1:300)

TYPICAL CROSS SECTION AT PIER
(SCALE 1:150)

VIEW 'Y'
(SCALE 1:150)

DETAILS OF LHS PIER CAP
(SCALE 1:150)

PLAN AT B–B
(SCALE 1:150)

PLAN AT C–C
(SCALE 1:150)

PLAN
(SCALE 1:300)

ELEVATION AT PIER
(SCALE 1:150)

TYPICAL SECTION OF COMPOSITE STEEL GIRDER FOR 36m SPAN
(SCALE 1:40)

TYPICAL SECTION OF COMPOSITE STEEL GIRDER FOR 46m SPAN
(SCALE 1:40)

CROSS SECTION OF PSC 'I' GIRDER
(SCALE 1:50)

TYPICAL CROSS SECTION AT PIER ABUTMENT
(SCALE 1:150)

ELEVATION OF ABUTMENT
(SCALE 1:150)

DETAILS OF LHS ABUTMENT PIER CAP
(SCALE 1:150)

KEY PLAN
(SCALE 1:5000)

NOTES:

1. ALL DIMENSIONS ARE IN MILLIMETERS AND LEVELS IN METERS UNLESS WRITTEN OTHERWISE.
2. NO DIMENSIONS SHALL BE SCALED FROM THIS DRAWING, ONLY WRITTEN DIMENSIONS SHALL BE FOLLOWED.
3. ACTUAL LOCATION OF ROB SHALL BE DECIDED BY RLY. ENGINEER-IN-CHARGE IN CONSULTATION WITH ROAD AUTHORITIES AT THE TIME OF ITS CONSTRUCTION.
4. ACTUAL DEPTH OF FOUNDATION SHALL BE DECIDED BY ENGINEER-IN-CHARGE TO SUIT THE SOIL STRATA MET WITH AT THE SITE. ENGINEER-IN-CHARGE SHOULD ENSURE REQUIRE PILE CAPACITY.
5. CRASH BARRIER SHALL BE PROVIDED AS PER MORTH STANDARDS.
6. MIN GRADE OF CONCRETE
   a) PSC SUPERSTRUCTURE – M45 b) RCC DECK SLAB – M40
   c) RCC ABUTMENT – M35 d) BEARING PEDESTALS – M40
   e) RCC CRASH BARRIER – M40 f) APPROACH SLAB – M30
7. THE BRIDGE SHALL BE DESIGNED FOR FOUR LANES OF IRC CLASS "A" LOADING OR ONE LANES OF CLASS 70R FOR EVERY TWO LANE AND SPECIAL VEHICLE LOADING OF 385 TONS SHALL BE CONSIDERED AS PER IRC:6–2017.
8. ALL STEEL PLATES USED IN FABRICATION OF THIS BRIDGE ARE OF GRADE E 350.
9. DESIGN OF ROB AND ALL RC WORKS SHALL CONFORM TO RELEVANT LATEST IRC & I.S. CODES OF PRACTICE.
10. SUITABLE DRAINAGE ARRANGEMENTS INSIDE AND OUTSIDE THE RAILWAY LIMITS ARE TO BE PROVIDED AND MAINTAINED BY THE ROAD AUTHORITY.
11. EXPANSION JOINTS (STRIP SEAL TYPE) SHOULD BE PROVIDED OF APPROVED QUALITY AS PER MORTH SPECIFICATIONS. CONTRACTOR SHOULD FURNISH DESIGN/DRAWINGS OF EXPANSION JOINT FROM FIRM APPROVED BY MORTH/MOST, AT VARIOUS RELEVANT AMBIENT TEMPERATURES TO SUIT SITE CORDITIONS WITH APPROVED OF ENGINEER INCHARGE.
12. ALL PROPOSED WORK ARE SHOWN IN RED EXISTING WORKS ARE SHOWN IN BLACK AND FUTURE WORKS ARE SHOWN IN GREEN.
13. BACK FILL BEHIND ABUTMENT SHALL BE DONE WITH SELECTED MATERIALS HAVING C=0 AND ø NOT LESS THAN 30.
14. TEMPORARY SPEED RESTRICTION MAY BE IMPOSED DURING EXECUTION OF WORK WITH APPROVAL OF DIVISIONAL ENGINEER
15. ANALYSIS AND DESIGN FOR COMPOSITE CONCRETE DECK IS AS PER IRC:22–2015.
16. THE DESIGN AND CONSTRUCTION SHALL CONFIRM TO THE CRITERIA LAID DOWN IN THE LATEST EDITIONS OF THE FOLLOWING CODES AND STANDARD SPECIFICATIONS:
   i) IRC STANDARD SPECIFICATIONS AND CODES OF PRACTICES FOR ROAD BRIDGES SUCH AS; IRC 5–2015, IRC 6–2017, IRC 78– 2014, IRC 112–2020.
   ii) SPECIFICATION FOR ROAD AND BRIDGES WORKS BY MORT&H.
   iii) R.D.S.O DESIGN AND DRAWINGS OF MINISTRY OF RAILWAY.
17. ALL MATERIAL SHALL PASS TEST/ANALYSIS PRESCRIBED BY RELEVANT IS SPECIFICATIONS.

RDSO DRAWING REFERENCE

RDSO/B–11777 (SERIES) – COMPOSITE STEEL GIRDER OF 42.00m CLEAR SPAN
RDSO/B–11775 R1 – 36m SPAN COMPOSITE WELDED ROB GIRDERS

REFERENCE DRAWINGS: (LATEST REVISION)

N0533/E/MAJ/DD–201.... GENERAL ARRANGEMENT DRAWING FOR ROB FROM CH 4+158.72 TO CH 4+265.00 KM

THE DIMENSIONS SHOWN ARE FOR TENDER PURPOSE ONLY

NOTES:

DATE	No.	REVISION	DRAWN	PREPARED	CHECKED	APPROVED
06/03/2026	R1	FOR APPROVAL	VSK	AGA	MD	MD
23/12/2025	R0	FIRST SUBMISSION	VSK	AGA	MD	MD

☑ APPROVAL ☐ CONSTRUCTION
☐ INFORMATION ☐ TENDER
☐ DRAFT ☐ PRELIMNARY

RELEASED FOR

GIS					
HIGHWAYS			MAJOR STRUCTURES		
ELECTRICAL			IRRIGATION/ WATER RESOURCES		
BUILDINGS			PHE / PLUMBING/ FIREFIGHTING		
ARCHITECTURE			MECHANICAL / HVAC		
CHECKED BY	SIGN	DATE	CHECKED BY	SIGN	DATE

FOR INTERNAL OFFICE ONLY

CONSULTANT: STUP Consultants Pvt. Ltd. (assystem stup)

REGISTERED OFFICE : Unit No.2702, 27th Floor, Rupa Renaissance, P.No.D-33 & D-207, Juinagar, MIDC TTC Industrial Area, Turbhe, Navi Mumbai, Thane, Maharashtra–400705 Tel: +91 (022) 68067777, E-mail: mumbai@assystem.com

OFFICE OF ORIGIN : #69, JP & Devi Jambukeshwar Arcade 4th Floor, Millers Road Bengaluru – 560 052 Tel.: 080 – 40 39 79 79 Email : bangalore@assystem.com

OWNER: BANGALORE DEVELOPMENT AUTHORITY

CONTRACTOR:

PROJECT: CONSTRUCTION OF EIGHT LANE BENGALURU BUSINESS CORRIDOR (BBC) TO BANGALORE CITY

TITLE: GENERAL ARRANGEMENT DRAWING FOR ROB FROM CH. 4+158.72 TO CH. 4+265.00 KM

DRG.NO.: N0533/E/MAJ/DD–201 (R1)

DATE: 23/12/2025
DRAWN: VSK
PREPARED: AGA
CHECKED: MD
APPROVED: MD
SCALE: AS SHOWN

THIS DRAWING IS THE PROPERTY OF STUP CONSULTANTS Pvt. LTD. IT SHOULD NOT BE USED, COPIED, OR REPRODUCED WITHOUT THEIR WRITTEN PERMISSION.

DISCLAIMER: ONLY APPROVED AND SIGNED HARD COPIES SHALL BE USED FOR CONSTRUCTION

THIS DRAWING IS THE PROPERTY OF STUP CONSULTANTS Pvt. LTD. IT SHOULD NOT BE USED, COPIED, OR REPRODUCED WITHOUT THEIR WRITTEN PERMISSION.

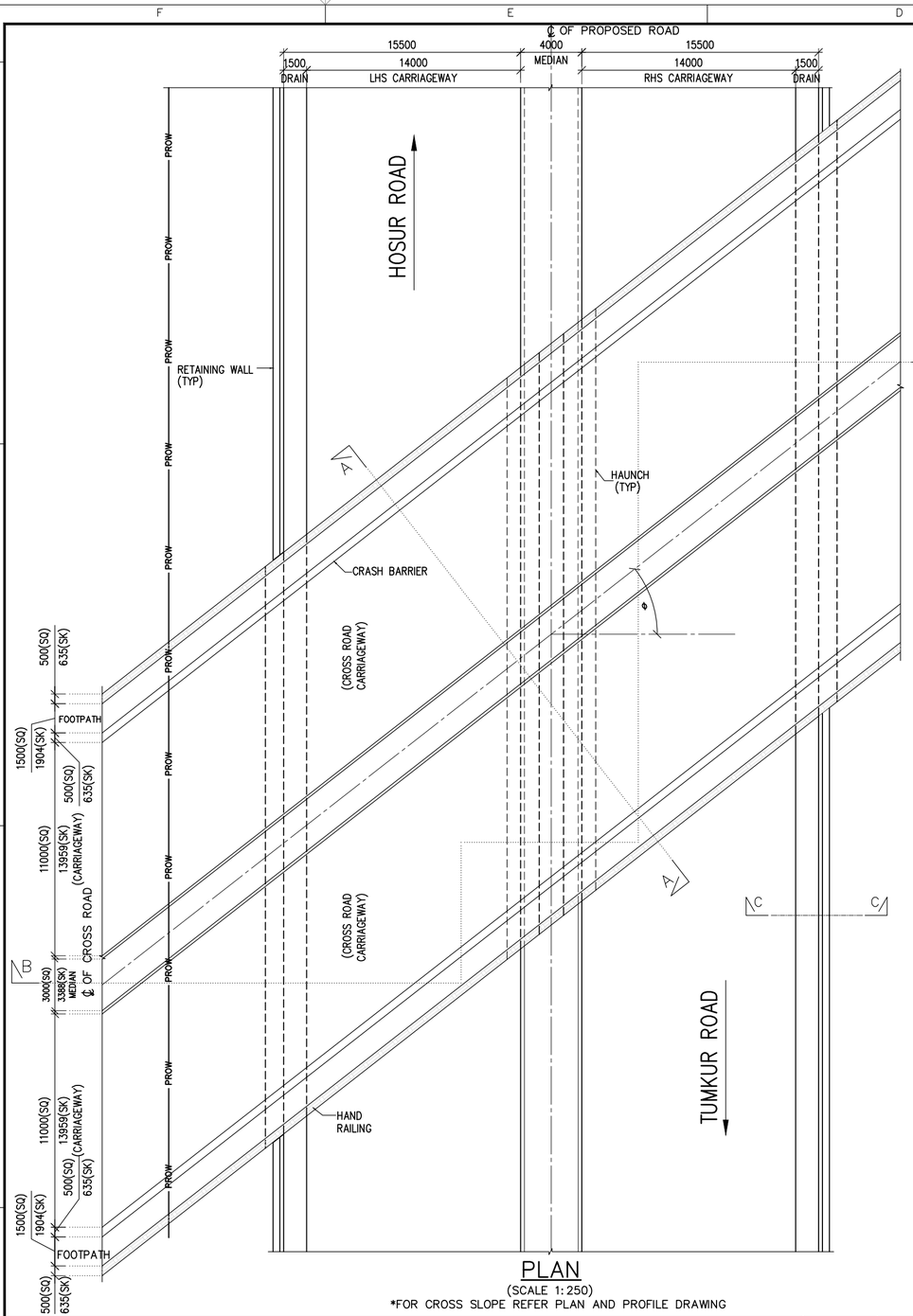

PLAN
(SCALE 1:250)
*FOR CROSS SLOPE REFER PLAN AND PROFILE DRAWING

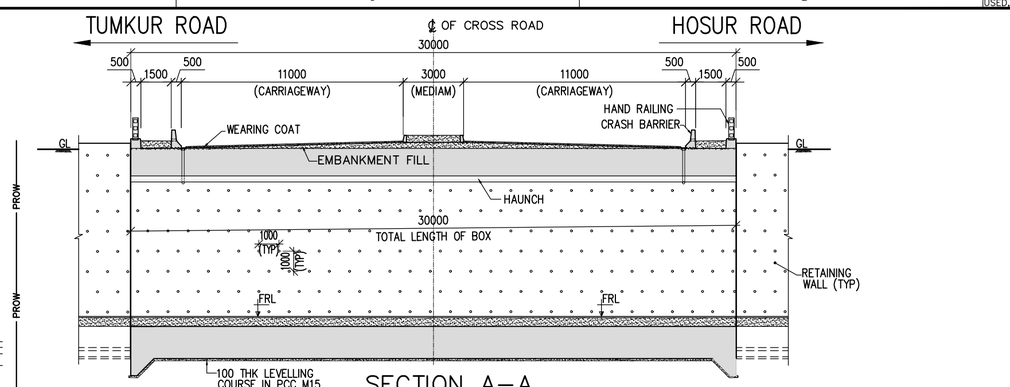

SECTION A–A
(SCALE 1:200)

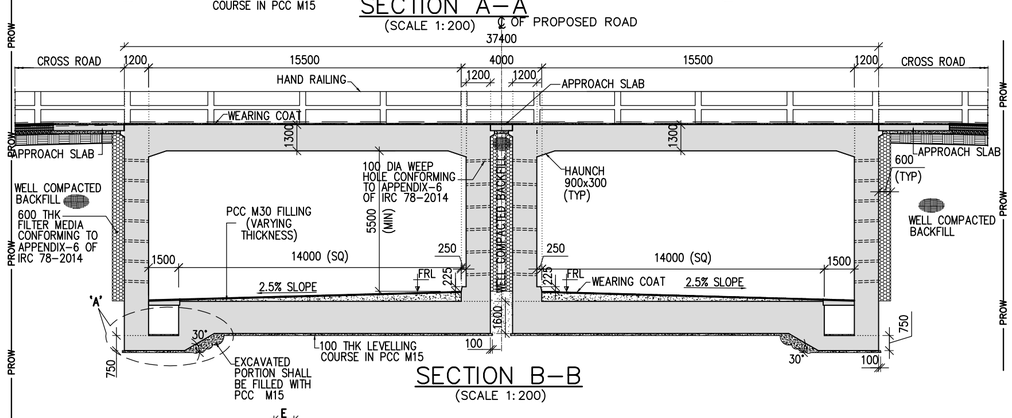

SECTION B–B
(SCALE 1:200)

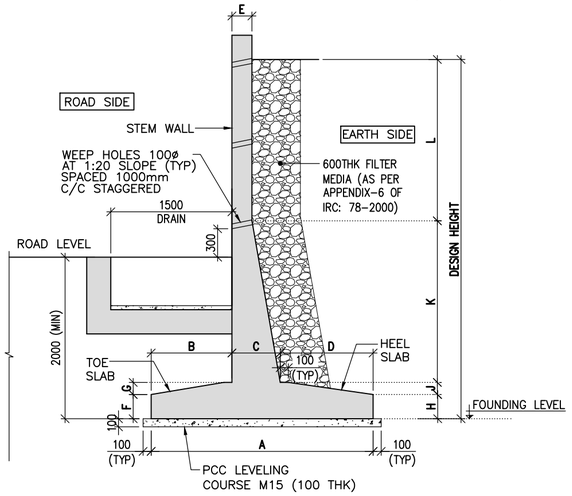

SECTION C–C
(SCALE 1:50)

TYPICAL DIMENSIONAL DETAILS FOR RETAINING WALL IN APPROACH AREAS

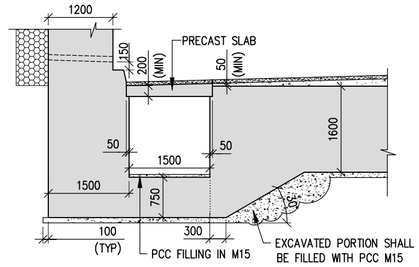

DETAIL –A
(SCALE 1:75)

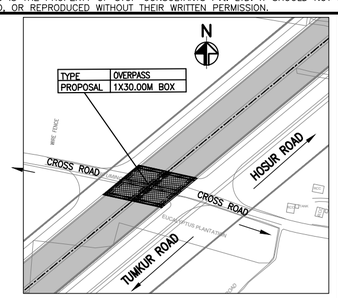

KEY PLAN
(SCALE 1:5000)

DETAILS OF STRUCTURE

TYPE	CHAINAGE	FRL	GL	VERTICAL CLEARANCE AT MEDIAN EDGE (m)	SKEW ANGLE
1	3+560	872.433	881.039	7.306	40
2	8+175	891.742	900.045	7.003	38

NOTES:
1. ALL DIMENSIONS ARE IN MM AND LEVELS ARE IN METERS UNLESS NOTED OTHERWISE.
2. ONLY WRITTEN DIMENSIONS TO BE FOLLOWED.
3. ALL THE DIMENSION SHOWN ARE INDICATIVE AND SHALL CHANGE DURING DETAIL DESIGN.
4. GRADE OF CONCRETE SHALL BE FOLLOW AS:
   a) CRASH BARRIER – M40
   b) APPROACH SLAB – M30
   c) RCC BOX – M35
5. REINFORCEMENT SHALL BE HIGH STRENGTH DEFORMED BARS OF GRADE Fe500D CONFORMING TO IS:1786–2008 HAVING MINIMUM ELONGATION 14.5%
6. DIMENSION OF STRUCTURAL MEMBERS SHOWN ARE INDICATIVE ONLY WHICH SHALL BE CONSIDERED BASED ON DETAILED DESIGN.
7. ABOVE DETAILS ARE OF TYPICAL NATURE TO INDICATE THE TYPE OF STRUCTURE AND SPACING OF STRUCTURAL MEMBER. ACTUAL CONSTRUCTION DESIGN MAY BE DIFFERENT BASED ON SITE CONDITIONS.
8. FOR CAMBER/SUPERELEVATION AND CROSS SECTION OF HIGHWAY AT SPECIFIC STRUCTURE LOCATIONS, RELEVANT TYPICAL CROSS SECTION DRAWING SHALL BE REFERRED.

LEGENDS:

TYP	:	TYPICAL
EJ	:	EXPANSION JOINT
THK.	:	THICK
℄	:	CENTERLINE
SK	:	SKEW
SQ	:	SQUARE
PCC	:	PLAIN CEMENT CONCRETE
FRL	:	FINISHED ROAD LEVEL
GL	:	GROUND LEVEL

DIMENSION SCHEDULE

TYPE	DESIGN HEIGHT	A	B	C	D	E	F	G	H	J	K	L
1	3000	2700	300	300	2100	250	300	0	300	0	700	2000
2	4000	3550	300	500	2750	250	300	100	300	100	1600	2000
3	5000	4350	600	600	3150	250	300	300	300	300	2400	2000
4	6000	5000	850	650	3500	250	300	350	300	350	3350	2000
5	7000	5750	1200	700	3850	250	300	450	300	450	4250	2000

NOTES:

DATE	No.	REVISION	DRAWN	PREPARED	CHECKED	APPROVED
02/03/26	R1	DRAWING TITLE MODIFIED	SSA	AGA	MD	MD
06/01/26	R0	FIRST SUBMISSION	PPM	AGA	MD	MD

☑ APPROVAL ☐ CONSTRUCTION
☐ INFORMATION ☐ TENDER
☐ DRAFT ☐ PRELIMNARY

RELEASED FOR

GIS					
HIGHWAYS			MAJOR STRUCTURES		
ELECTRICAL			IRRIGATION/ WATER RESOURCES		
BUILDINGS			PHE / PLUMBING/ FIREFIGHTING		
ARCHITECTURE			MECHANICAL / HVAC		
CHECKED BY	SIGN	DATE	CHECKED BY	SIGN	DATE

FOR INTERNAL OFFICE ONLY

CONSULTANT
STUP Consultants Pvt. Ltd.
REGISTERED OFFICE : Unit No.2702, 27th Floor, Rupa Renaissance, P.No.G-33 & D-207, Juinagar, MIDC TTC Industrial Area, Turbhe, Navi Mumbai, Thane, Maharashtra-400705. Tel: +91 (022) 68067777, E-mail: mumbai@assystem.com
OFFICE OF ORIGIN : 855, 3rd & 4th Block, Jambukeshwar Arcade 4th Floor, Millers Road Bengaluru – 560 052 Tel.: 080 – 40 39 79 79 Email : bangalore@assystem.com

OWNER: BANGALORE DEVELOPMENT AUTHORITY
CONTRACTOR
PROJECT: CONSTRUCTION OF EIGHT LANE BENGALURU BUSINESS CORRIDOR (BBC)
TITLE: TYPICAL GENERAL ARRANGEMENT DRAWING FOR OVERPASS
DRG.NO.: N0533/E/MAJ/DD-301 (R0)

DATE: 06/01/2026
DRAWN: PPM
PREPARED: AGA
CHECKED: MD
APPROVED: MD
SCALE: AS SHOWN

DISCLAIMER: ONLY APPROVED AND SIGNED HARD COPIES SHALL BE USED FOR CONSTRUCTION

THIS DRAWING IS THE PROPERTY OF STUP CONSULTANTS Pvt. LTD. IT SHOULD NOT BE USED, COPIED, OR REPRODUCED WITHOUT THEIR WRITTEN PERMISSION.

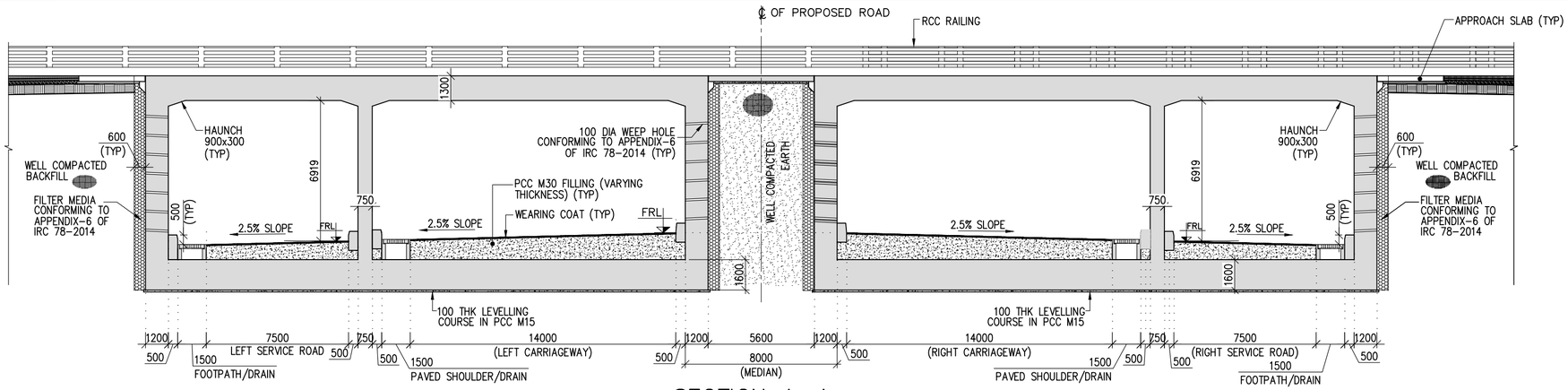

SECTION A–A
(SCALE 1:200)

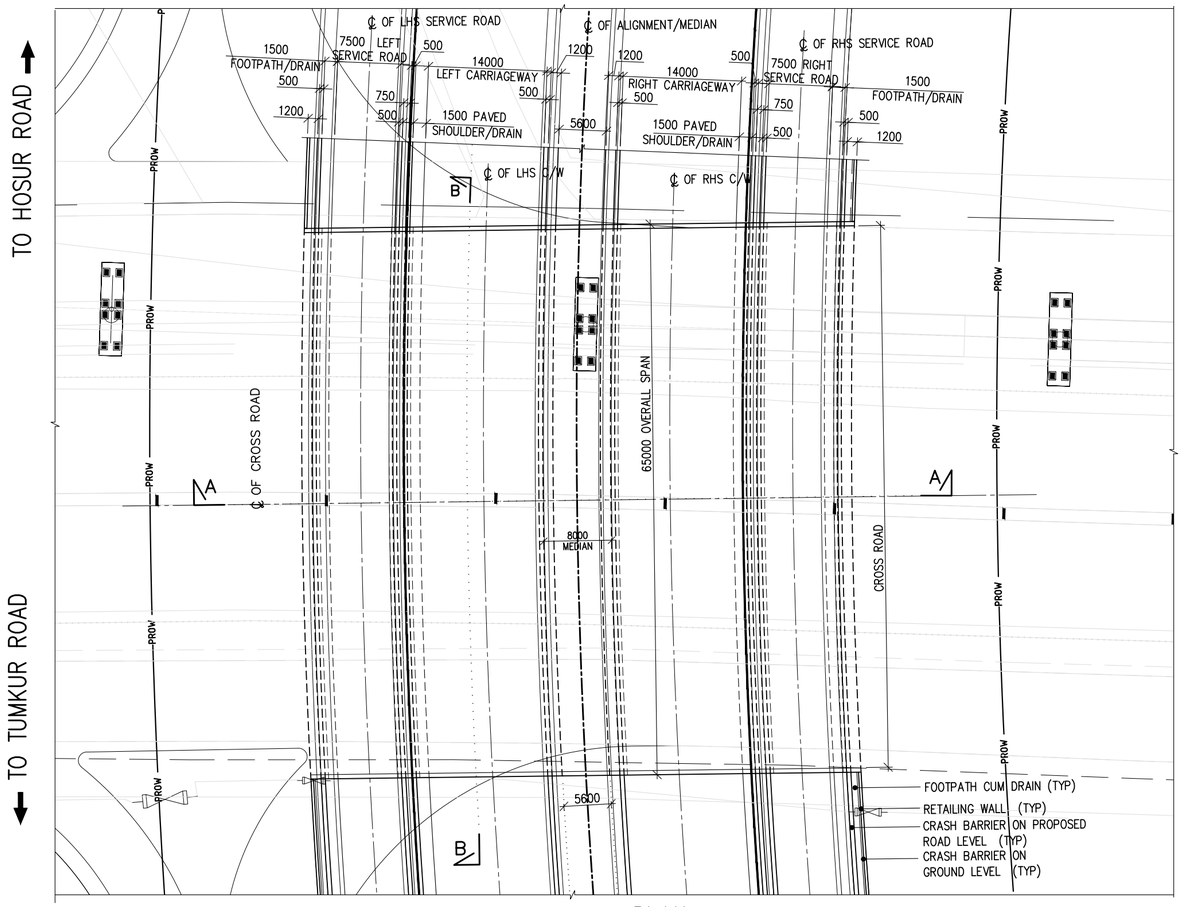

PLAN
(SCALE 1:500)

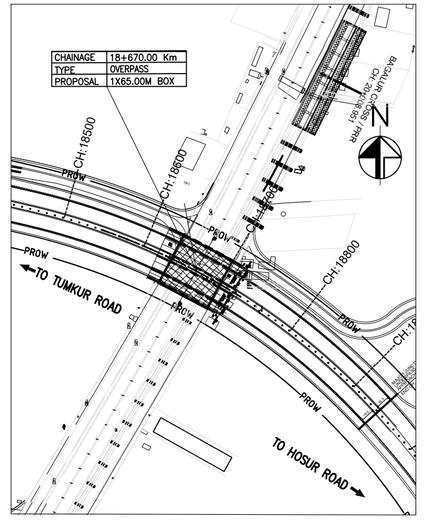

KEY PLAN
(SCALE 1:5000)

NOTES:

1. ALL DIMENSIONS ARE IN MM AND LEVELS ARE IN METERS UNLESS NOTED OTHERWISE.
2. ONLY WRITTEN DIMENSIONS TO BE FOLLOWED.
3. ALL THE DIMENSION SHOWN ARE INDICATIVE AND SHALL CHANGE DURING DETAIL DESIGN.
4. GRADE OF CONCRETE SHALL BE FOLLOW AS:
   a) CRASH BARRIER – M40
   b) APPROACH SLAB – M30
   c) RCC BOX – M35
5. REINFORCEMENT SHALL BE HIGH STRENGTH DEFORMED BARS OF GRADE Fe500D CONFORMING TO IS:1786-2008 HAVING MINIMUM ELONGATION 14.5%
6. DIMENSION OF STRUCTURAL MEMBERS SHOWN ARE INDICATIVE ONLY WHICH SHALL BE CONSIDERED BASED ON DETAILED DESIGN.
7. ABOVE DETAILS ARE OF TYPICAL NATURE TO INDICATE THE TYPE OF STRUCTURE AND SPACING OF STRUCTURAL MEMBER. ACTUAL CONSTRUCTION DESIGN MAY BE DIFFERENT BASED ON SITE CONDITIONS.
8. FOR CAMBER/SUPERELEVATION AND CROSS SECTION OF HIGHWAY AT SPECIFIC STRUCTURE LOCATIONS, RELEVANT TYPICAL CROSS SECTION DRAWING SHALL BE REFERRED.

LEGENDS:

TYP	–	TYPICAL
EJ	–	EXPANSION JOINT
THK	–	THICK
℄	–	CENTERLINE
⊠	–	POT PTFE BEARINGS
SK	–	SKEW
SQ	–	SQUARE
PCC	–	PLAIN CEMENT CONCRETE
FRL	–	FINISHED ROAD LEVEL
GL	–	GROUND LEVEL
TOR	–	TOP OF RETAINING WALL

REFERENCE DRAWINGS: (LATEST REVISION)

N0533/E/MAJ/DD–303....	GENERAL ARRANGEMENT DRAWING FOR OVERPASS AT CH. 18+670.00 Km (SHEET–2 OF 2)

NOTES:

DATE	No.	REVISION	DRAWN	PREPARED	CHECKED	APPROVED
09–01–26	R0	FIRST SUBMISSION	VSK	AGA	MD	MD

THE DIMENSIONS SHOWN ARE FOR TENDER PURPOSE ONLY

☑ APPROVAL	☐ CONSTRUCTION		
☐ INFORMATION	☐ TENDER		
☐ DRAFT	☐ PRELIMNARY		

RELEASED FOR

GIS					
HIGHWAYS			MAJOR STRUCTURES		
ELECTRICAL			IRRIGATION/ WATER RESOURCES		
BUILDINGS			PHE / PLUMBING/ FIREFIGHTING		
ARCHITECTURE			MECHANICAL / HVAC		
CHECKED BY	SIGN	DATE	CHECKED BY	SIGN	DATE

FOR INTERNAL OFFICE ONLY

CONSULTANT
STUP Consultants Pvt. Ltd.
REGISTERED OFFICE : Unit. No.2702, 27th Floor, Rupa Renaissance, P.No.D–33 & D–207, Juinagar, MIDC ITC Industrial Area, Turbhe, Navi Mumbai, Thane, Maharashtra–400705. Tel: +91 (022) 68067777, E–mail: mumbai@assystem.com
OFFICE OF ORIGIN : #86, JP & Devi Jambukeshwar Arcade 4th Floor, Millers Road Bengaluru – 560 052 Tel.: 080 – 40 39 79 79 Email : bangalore@assystem.com

OWNER: BANGALORE DEVELOPMENT AUTHORITY

CONTRACTOR

PROJECT: CONSTRUCTION OF EIGHT LANE BENGALURU BUSINESS CORRIDOR (BBC)

TITLE: GENERAL ARRANGEMENT DRAWING FOR OVERPASS AT CH. 18+670.00 Km (SHEET 1 OF 2)

DRG.NO.: N0533/E/MAJ/DD–302 (R0)

DATE: 09/01/2026
DRAWN: VSK
PREPARED: AGA
CHECKED: MD
APPROVED: MD
SCALE: AS SHOWN

DISCLAIMER: ONLY APPROVED AND SIGNED HARD COPIES SHALL BE USED FOR CONSTRUCTION

THIS DRAWING IS THE PROPERTY OF STUP CONSULTANTS Pvt. LTD. IT SHOULD NOT BE USED, COPIED, OR REPRODUCED WITHOUT THEIR WRITTEN PERMISSION.

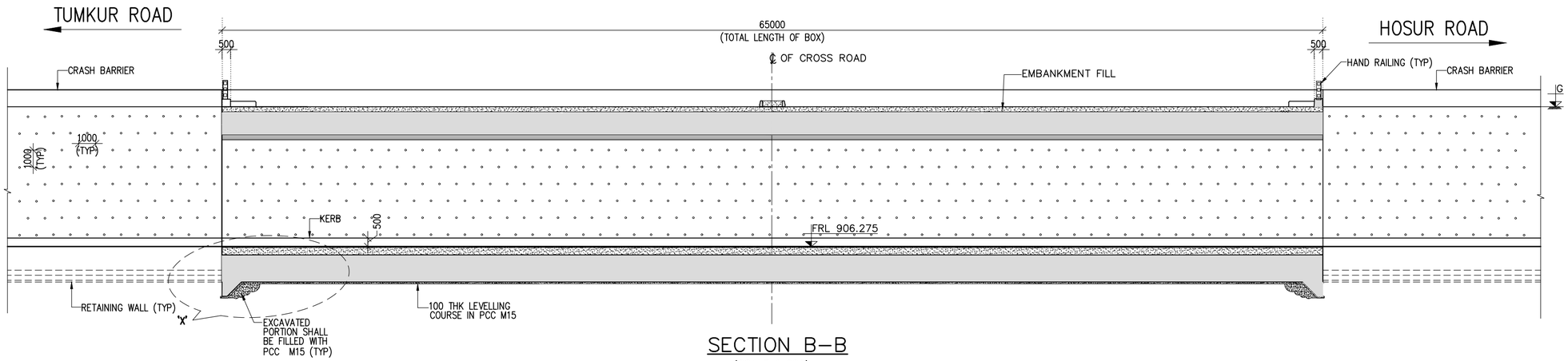

SECTION B–B
(SCALE 1:200)

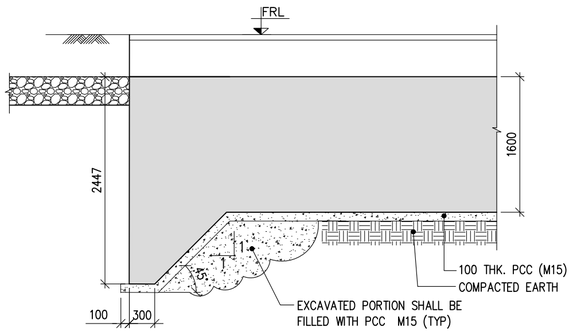

DETAIL–'X'
DETAILS OF SHEAR KEY
(SCALE 1:50)

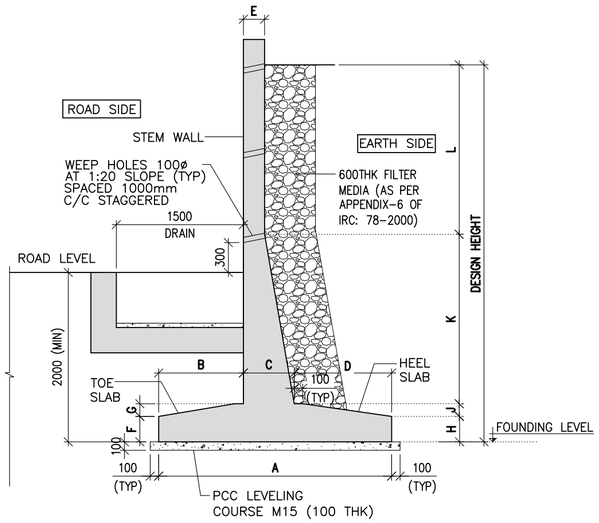

TYPICAL DIMENSIONAL DETAILS FOR RETAINING WALL IN APPROACH AREAS
(SCALE 1:50)

DIMENSION SCHEDULE

TYPE	DESIGN HEIGHT	A	B	C	D	E	F	G	H	J	K	L
1	3000	2700	300	300	2100	250	300	0	300	0	700	2000
2	4000	3550	300	500	2750	250	300	100	300	100	1600	2000
3	5000	4350	600	600	3150	250	300	300	300	300	2400	2000
4	6000	5000	850	650	3500	250	300	350	300	350	3350	2000
5	7000	5750	1200	700	3850	250	300	450	300	450	4250	2000

THE DIMENSIONS SHOWN ARE FOR TENDER PURPOSE ONLY

NOTES:
1. ALL DIMENSIONS ARE IN MILLIMETERS, LEVELS ARE IN METERS & CHAINAGES ARE IN KILOMETERS, UNLESS MENTIONED OTHERWISE.
2. DIMENSIONS ARE NOT TO BE SCALED OFF ONLY WRITTEN DIMENSIONS ARE TO BE FOLLOWED.

REFERENCE DRAWINGS: (LATEST REVISION)

N0533/E/MAJ/DD–302.... GENERAL ARRANGEMENT DRAWING FOR OVERPASS AT CH. 18+670.00 Km (SHEET–1 OF 2)

DATE	No.	REVISION	DRAWN	PREPARED	CHECKED	APPROVED
09–01–26	R0	FIRST SUBMISSION	VSK	AGA	MD	MD

☑ APPROVAL ☐ CONSTRUCTION
☐ INFORMATION ☐ TENDER
☐ DRAFT ☐ PRELIMNARY

RELEASED FOR

GIS					
HIGHWAYS			MAJOR STRUCTURES		
ELECTRICAL			IRRIGATION/ WATER RESOURCES		
BUILDINGS			PHE / PLUMBING/ FIREFIGHTING		
ARCHITECTURE			MECHANICAL / HVAC		
CHECKED BY	SIGN	DATE	CHECKED BY	SIGN	DATE

FOR INTERNAL OFFICE ONLY

CONSULTANT
STUP Consultants Pvt. Ltd.
REGISTERED OFFICE : Unit No.2702, 27th Floor, Rupa Renaissance, P.No.D–33 & D–207, Juinagar, MIDC TTC Industrial Area, Turbhe, Navi Mumbai, Thane, Maharashtra–400705 Tel: +91 (022) 68067777, E–mail: mumbai@assystem.com
OFFICE OF ORIGIN : #16, JP & Devi Jambukeshwar Arcade 4th Floor, Millers Road Bengaluru – 560 052 Tel.: 080 – 40 39 79 79 Email : bangalore@assystem.com

OWNER: BANGALORE DEVELOPMENT AUTHORITY

CONTRACTOR

PROJECT: CONSTRUCTION OF EIGHT LANE BENGALURU BUSINESS CORRIDOR (BBC)

TITLE: GENERAL ARRANGEMENT DRAWING FOR OVERPASS AT CH. 18+670.00 Km (SHEET 2 OF 2)

DRG.NO.: N0533/E/MAJ/DD–303 (R0)

DATE: 09/01/2026
DRAWN: VSK
PREPARED: AGA
CHECKED: MD
APPROVED: MD
SCALE: AS SHOWN

DISCLAIMER: ONLY APPROVED AND SIGNED HARD COPIES SHALL BE USED FOR CONSTRUCTION

THIS DRAWING IS THE PROPERTY OF STUP CONSULTANTS Pvt. LTD. IT SHOULD NOT BE USED, COPIED, OR REPRODUCED WITHOUT THEIR WRITTEN PERMISSION.

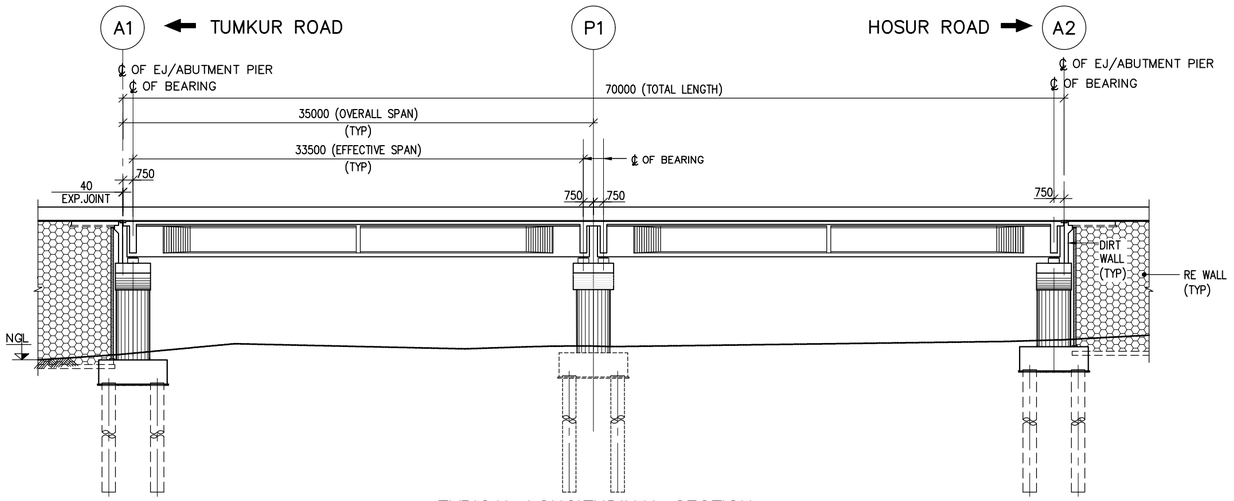

TYPICAL LONGITUDINAL SECTION
(SCALE 1:300)

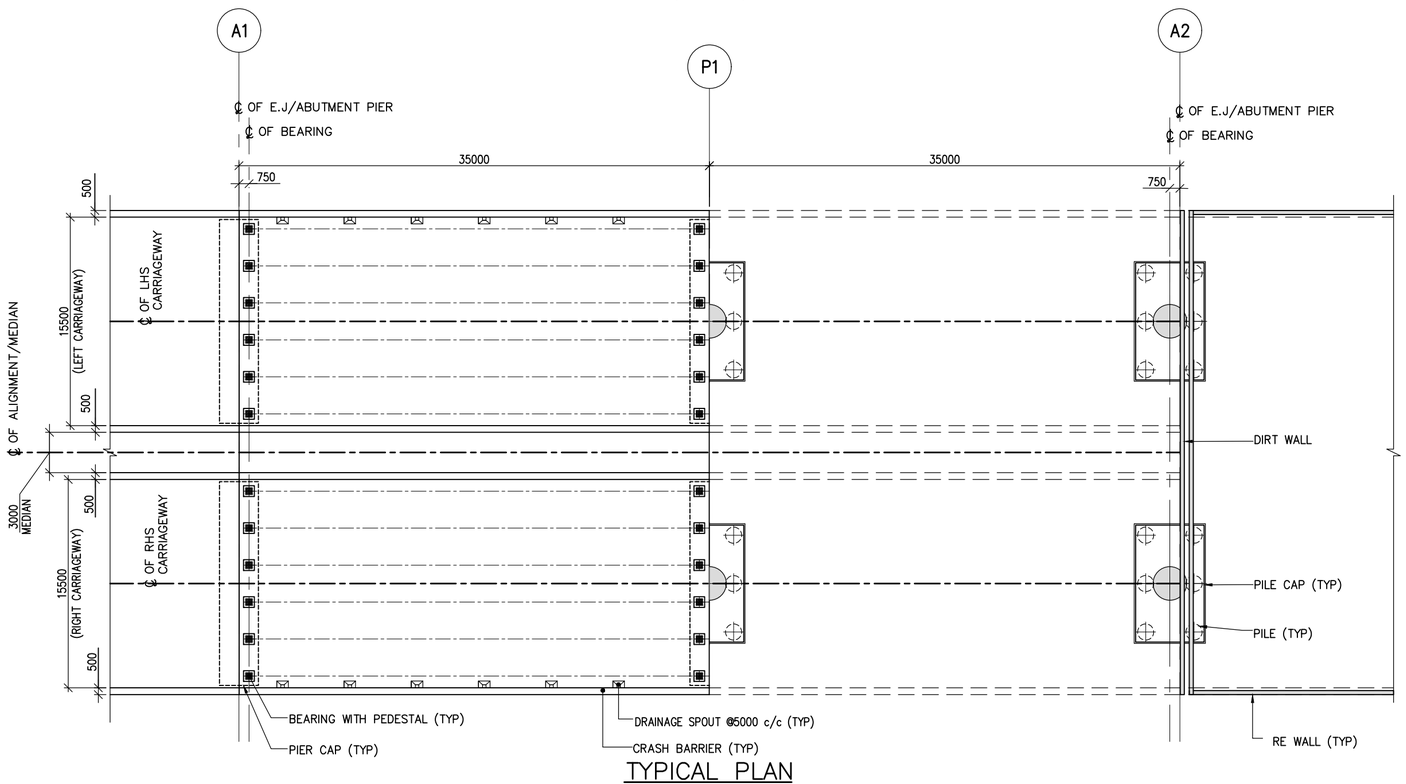

TYPICAL PLAN
(SCALE 1:300)

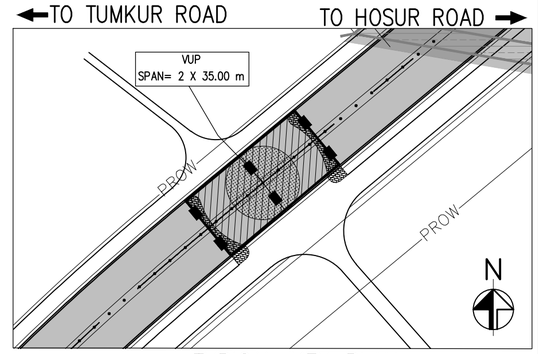

TYPICAL KEY PLAN
(SCALE 1:2000)

NOTES:

1. ALL THE DIMENSIONS ARE IN MILLIMETERS AND CHAINAGES ARE IN METERS
2. DIMENSIONS SHALL NOT BE SCALED OFF, ONLY WRITTEN DIMENSIONS SHALL BE FOLLOWED
3. GRADE OF CONCRETE SHALL BE FOLLOW AS:
   a) PSC SUPER STRUCTURE – M50
   b) PIER, PIER CAP & PEDESTAL – M45
   c) PILE & PILE CAP – M35
   d) CRASH BARRIER – M40
   e) APPROACH SLAB – M30
4. REINFORCEMENT SHALL BE HIGH STRENGTH DEFORMED BARS OF GRADE Fe500D CONFORMING TO IS:1786–2008 HAVING MINIMUM ELONGATION 14.5%
5. ALL BEARINGS ARE POT CUM PTFE TYPE.
6. EXPANSION JOINTS ARE WITH STRIP SEAL TYPE.
7. PERMANENT LINERS SHALL BE PROVIDED FOR PILES EXPOSED TO AGGRESSIVE SOIL.
8. DIMENSION OF STRUCTURAL MEMBERS SHOWN ARE INDICATIVE ONLY WHICH SHALL BE CONSIDERED BASED ON DETAILED DESIGN.
9. ABOVE DETAILS ARE OF TYPICAL NATURE TO INDICATE THE TYPE OF STRUCTURE AND SPACING OF STRUCTURAL MEMBER. ACTUAL CONSTRUCTION DESIGN MAY BE DIFFERENT BASED ON SITE CONDITIONS.
10. PILE CAPACITY CONSIDERED AS 375T FOR 1.2 DIA PILE OF 25M LENGTH FOR FOUNDATION DESIGN.
11. FOR CAMBER/SUPERELEVATION AND CROSS SECTION OF HIGHWAY AT SPECIFIC STRUCTURE LOCATIONS, RELEVANT TYPICAL CROSS SECTION DRAWING SHALL BE REFERRED.

LEGEND:

1) FRL – FINISHED ROAD LEVEL
2) EJ – EXPANSION JOINT
3) ⊗ ↑ – JACK POINT
4) TYP – TYPICAL
5) NGL – NATURAL GROUND LEVEL

REFERENCE DRAWINGS: (LATEST REVISION)

N0533/E/MAJ/DD–402....GENERAL ARRANGEMENT FOR VUP (TYPICAL)
(SHEET 2 OF 2)

TYPICAL VUP DETAILS

SR NO.	PROPOSED CHAINAGE	SPAN ARRANGEMENT (m)	FRL	GL	VERTICAL CLEARANCE AT MEDIAN EDGE (m)
1	1+620	2X35	880.647	871.307	6.650
2	TL. 2+200	2X35	866.487	854.937	8.860
3	6+760	2X35	889.202	880.175	6.337
4	8+900	2X35	889.895	880.535	6.670
5	10+700	2X35	901.035	890.447	7.898

THE DIMENSIONS SHOWN ARE FOR TENDER PURPOSE ONLY

DATE	No.	REVISION	DRAWN	PREPARED	CHECKED	APPROVED
02–03–26	R0	VUP AT CH. 4+960 DELETED & TL.CH. 2+200 ADDED	SSA	AGA	MD	MD
30–12–25	R0	FIRST SUBMISSION	SSA	AGA	MD	MD

☑ APPROVAL ☐ CONSTRUCTION
☐ INFORMATION ☐ TENDER
☐ DRAFT ☐ PRELIMNARY

RELEASED FOR

GIS					
HIGHWAYS			MAJOR STRUCTURES		
ELECTRICAL			IRRIGATION/ WATER RESOURCES		
BUILDINGS			PHE / PLUMBING/ FIREFIGHTING		
ARCHITECTURE			MECHANICAL / HVAC		
CHECKED BY	SIGN	DATE	CHECKED BY	SIGN	DATE

FOR INTERNAL OFFICE ONLY

CONSULTANT: STUP Consultants Pvt. Ltd.
REGISTERED OFFICE : Unit No.2702, 27th Floor, Rupa Renaissance, P.No.D–33 & D–207, Juinagar, MIDC TTC Industrial Area, Turbhe, Navi Mumbai, Thane, Maharashtra–400705. Tel: +91 (022) 68067777, E–mail: mumbai@asssystem.com
OFFICE OF ORIGIN : 6th, JP & Devi Jambukeshwar Arcade 4th Floor, Millers Road Bengaluru – 560 052 Tel.: 080 – 40 39 79 79 Email : bangalore@asssystem.com
OWNER: BANGALORE DEVELOPMENT AUTHORITY
DATE: 30–12–2025
CONTRACTOR:
DRAWN: SSA
PROJECT: CONSTRUCTION OF EIGHT LANE BENGALURU BUSINESS CORRIDOR (BBC)
PREPARED: AGA
CHECKED: MD
TITLE: GENERAL ARRANGEMENT FOR VUP (TYPICAL) (SHEET 1 OF 2)
APPROVED: MD
DRG.NO.: N0533/E/MAJ/DD–401 (R1)
SCALE: AS SHOWN

DISCLAIMER: ONLY APPROVED AND SIGNED HARD COPIES SHALL BE USED FOR CONSTRUCTION

THIS DRAWING IS THE PROPERTY OF STUP CONSULTANTS Pvt. LTD. IT SHOULD NOT BE USED, COPIED, OR REPRODUCED WITHOUT THEIR WRITTEN PERMISSION.

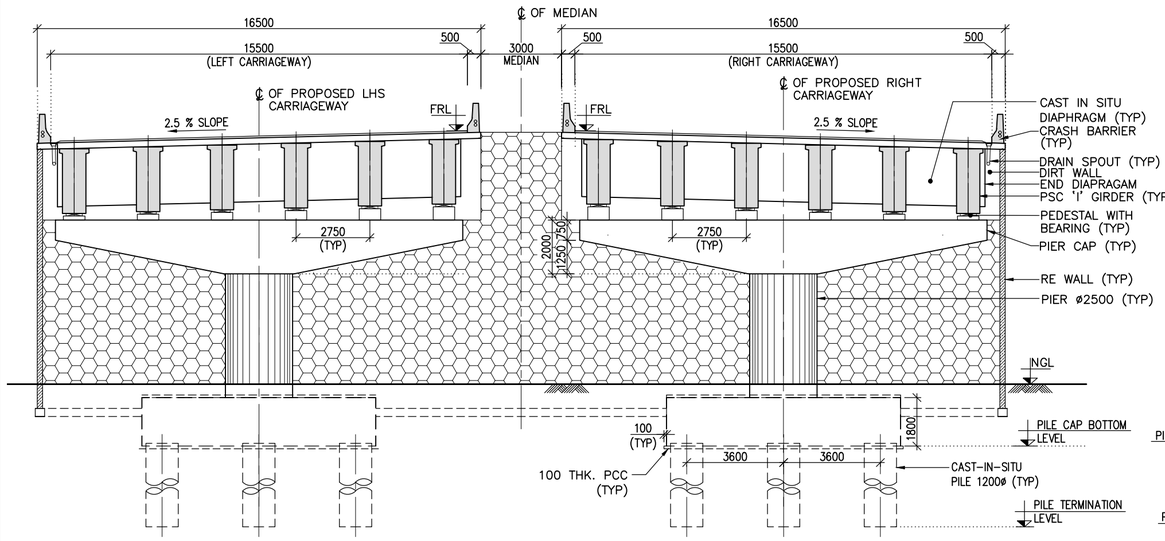

TYPICAL CROSS SECTION AT ABUTMENT PIER

(SCALE 1:150)

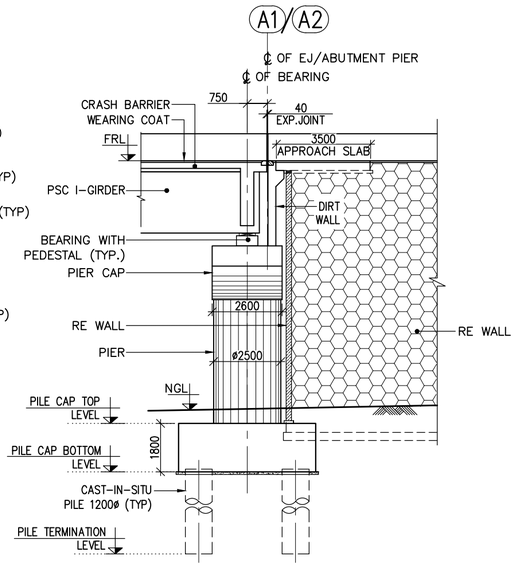

ELEVATION OF ABUTMENT PIER

(SCALE 1:150)

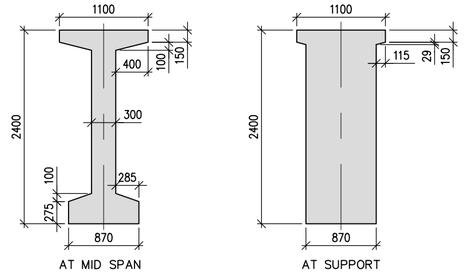

CROSS SECTION OF PSC 'I' GIRDER

(SCALE 1:50)

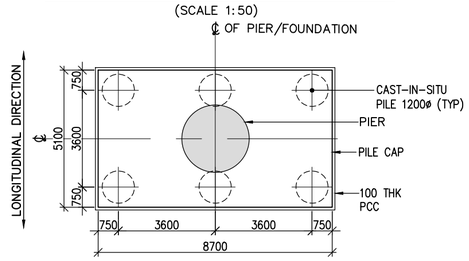

PLAN AT A–A

(SCALE 1:150)

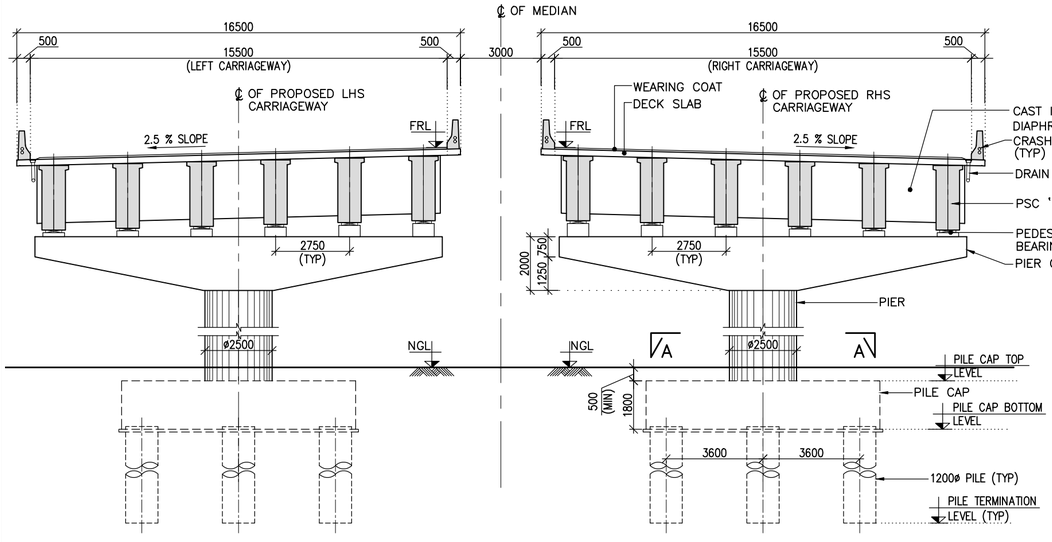

TYPICAL CROSS SECTION AT PIER

(SCALE 1:150)

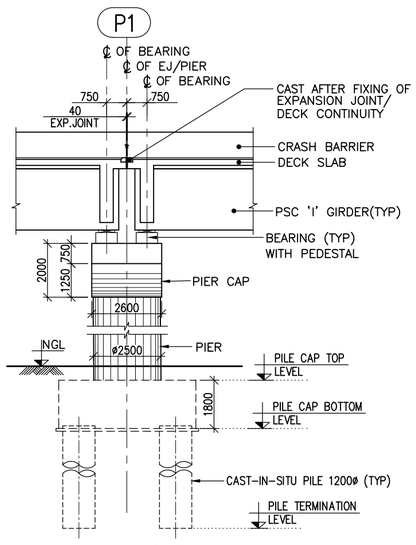

VIEW 'Y'

(SCALE 1:150)

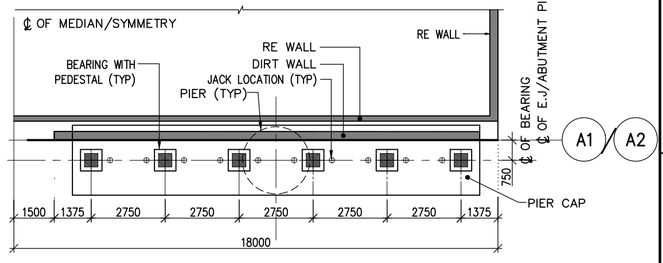

DETAILS OF ABUTMENT PIER CAP

(SCALE 1:150)

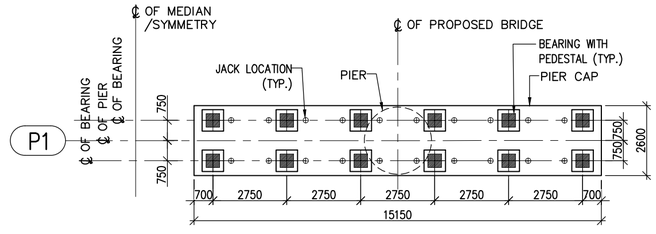

DETAILS OF PIER CAP

(SCALE 1:150)

THE DIMENSIONS SHOWN ARE FOR TENDER PURPOSE ONLY

NOTES:

1. ALL DIMENSIONS ARE IN MILLIMETERS, LEVELS ARE IN METERS & CHAINAGES ARE IN KILOMETERS, UNLESS MENTIONED OTHERWISE.
2. DIMENSIONS ARE NOT TO BE SCALED OFF ONLY WRITTEN DIMENSIONS ARE TO BE FOLLOWED.

REFERENCE DRAWINGS: (LATEST REVISION)

N0533/E/MAJ/DD-401....GENERAL ARRANGEMENT FOR VUP(TYPICAL) (SHEET-1 OF 2)

DATE	No.	REVISION	DRAWN	PREPARED	CHECKED	APPROVED
02-03-26	R0	VUP AT CH. 4+960 DELETED & TL.CH. 2+200 ADDED	SSA	AGA	MD	MD
30-12-25	R0	FIRST SUBMISSION	SSA	AGA	MD	MD

☑ APPROVAL ☐ CONSTRUCTION
☐ INFORMATION ☐ TENDER
☐ DRAFT ☐ PRELIMNARY

RELEASED FOR

GIS					
HIGHWAYS			MAJOR STRUCTURES		
ELECTRICAL			IRRIGATION/ WATER RESOURCES		
BUILDINGS			PHE / PLUMBING/ FIREFIGHTING		
ARCHITECTURE			MECHANICAL / HVAC		
CHECKED BY	SIGN	DATE	CHECKED BY	SIGN	DATE

FOR INTERNAL OFFICE ONLY

CONSULTANT
STUP Consultants Pvt. Ltd.
REGISTERED OFFICE : Unit No.2705, 27th Floor, Rupa Renaissance, P.No.D-33 & D-207, Juinagar, MIDC TTC Industrial Area, Turbhe, Navi Mumbai, Thane, Maharashtra-400705. Tel: +91 (022) 68067777, E-mail: mumbai@stupsytem.com
OFFICE OF ORIGIN : 855, JP & Devi Jambukeshwar Arcade 4th Floor, Millers Road Bengaluru - 560 052 Tel.: 080 - 40 39 79 79 Email : bangalore@stupsytem.com

OWNER: BANGALORE DEVELOPMENT AUTHORITY

DATE: 30-12-2025

CONTRACTOR

DRAWN: SSA

PROJECT: CONSTRUCTION OF EIGHT LANE BENGALURU BUSINESS CORRIDOR (BBC)

PREPARED: AGA

CHECKED: MD

TITLE: GENERAL ARRANGEMENT FOR VUP (TYPICAL) (SHEET 2 OF 2)

APPROVED: MD

DRG.NO.: N0533/E/MAJ/DD-402 (R1)

SCALE: AS SHOWN

DISCLAIMER: ONLY APPROVED AND SIGNED HARD COPIES SHALL BE USED FOR CONSTRUCTION

THIS DRAWING IS THE PROPERTY OF STUP CONSULTANTS Pvt. LTD. IT SHOULD NOT BE USED, COPIED, OR REPRODUCED WITHOUT THEIR WRITTEN PERMISSION.

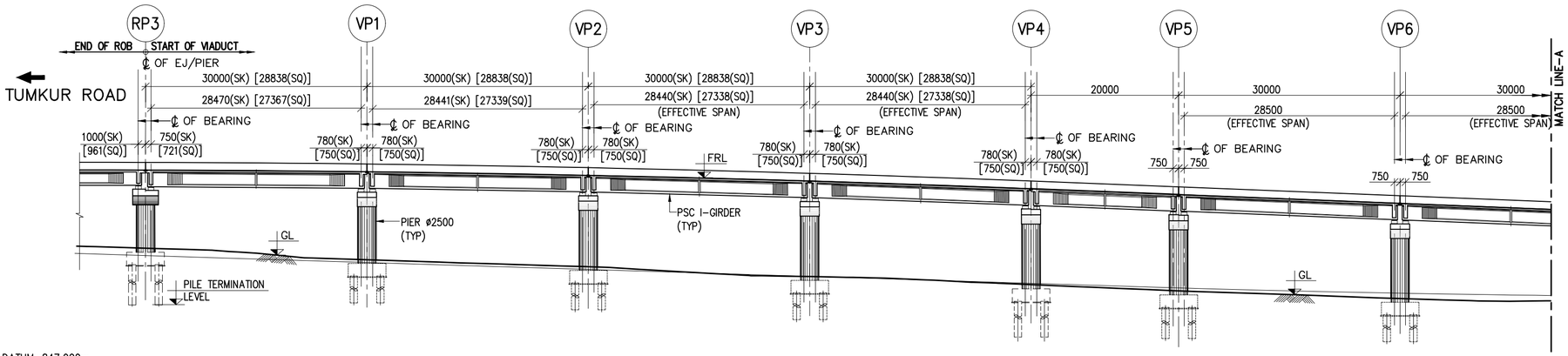

DATUM=847.000m

PROPOSED ROAD LEVEL ON C/L (m)	873.907	873.687	873.192	872.420	871.373	870.580	869.390
GROUND LEVEL ON C/L (m)	863.271	861.699	860.764	859.436	858.329	857.493	856.444
CHAINAGES (km)	4+265.00	4+295.00	4+325.00	4+355.00	4+385.00	4+405.00	4+435.00

LONGITUDINAL ELEVATION AT CARRIAGEWAY

(SCALE 1:500)

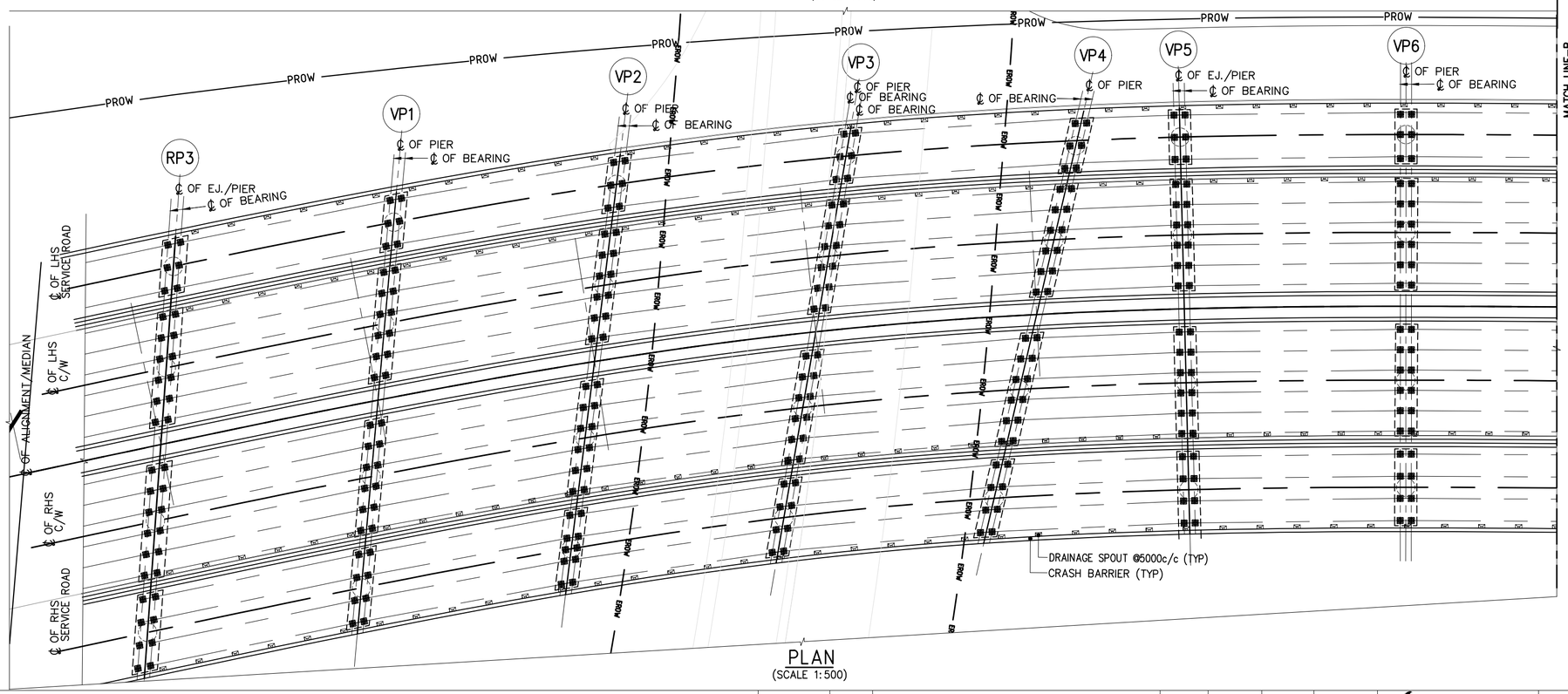

PLAN

(SCALE 1:500)

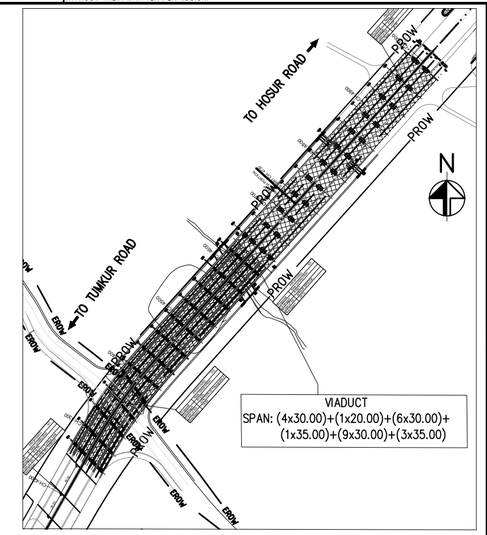

KEY PLAN

(SCALE 1:6000)

NOTES:

1. ALL THE DIMENSIONS ARE IN MILLIMETERS AND CHAINAGES ARE IN KILOMETERS
2. DIMENSIONS SHALL NOT BE SCALED OFF, ONLY WRITTEN DIMENSIONS SHALL BE FOLLOWED
3. GRADE OF CONCRETE SHALL BE FOLLOW AS:
   a) PSC SUPER STRUCTURE – M50
   b) PIER, PIER CAP & PEDESTAL – M45
   c) PILE & PILE CAP – M35
   d) CRASH BARRIER – M40
   e) APPROACH SLAB – M30
4. REINFORCEMENT SHALL BE HIGH STRENGTH DEFORMED BARS OF GRADE Fe500D CONFORMING TO IS:1786-2008 HAVING MINIMUM ELONGATION 14.5%
5. ALL BEARINGS ARE POT CUM PTFE TYPE.
6. EXPANSION JOINTS ARE WITH STRIP SEAL TYPE.
7. PERMANENT LINERS SHALL BE PROVIDED FOR PILES EXPOSED TO AGGRESSIVE SOIL.
8. DIMENSION OF STRUCTURAL MEMBERS SHOWN ARE INDICATIVE ONLY WHICH SHALL BE CONSIDERED BASED ON DETAILED DESIGN.
9. ABOVE DETAILS ARE OF TYPICAL NATURE TO INDICATE THE TYPE OF STRUCTURE AND SPACING OF STRUCTURAL MEMBER. ACTUAL CONSTRUCTION DESIGN MAY BE DIFFERENT BASED ON SITE CONDITIONS.
10. PILE CAPACITY CONSIDERED AS 375T FOR 1.2 DIA PILE OF 25M LENGTH FOR FOUNDATION DESIGN.
11. FOR CAMBER/SUPERELEVATION AND CROSS SECTION OF HIGHWAY AT SPECIFIC STRUCTURE LOCATIONS, RELEVANT TYPICAL CROSS SECTION DRAWING SHALL BE REFERRED.

LEGEND:

1) FRL – FINISHED ROAD LEVEL
2) EBL – EXISTING BED LEVEL
3) EJ – EXPANSION JOINT
4) ⊗ ▭ – POT PTFE BEARING
5) ⊗ ↑ – JACK POINT
6) TYP – TYPICAL
7) DC – DECK CONTINUES
8) GL – GROUND LEVEL

REFERENCE DRAWINGS: (LATEST REVISION)

N0533/E/MAJ/DD-502 TO 507....	GENERAL ARRANGEMENT DRAWING FOR VIADUCT FROM CH 4+265 TO CH 4+995 KM (SHEET-2 OF 7 TO SHEET-7 OF 7)

NOTES:

DATE	No.	REVISION	DRAWN	PREPARED	CHECKED	APPROVED
05/03/2026	R1	FOR APPROVAL	VSK	AGA	MD	MD
31/12/2025	R0	FIRST SUBMISSION	VSK	AGA	MD	MD

THE DIMENSIONS SHOWN ARE FOR TENDER PURPOSE ONLY

☑ APPROVAL	☐ CONSTRUCTION		
☐ INFORMATION	☐ TENDER		
☐ DRAFT	☐ PRELIMNARY		

RELEASED FOR

GIS					
HIGHWAYS			MAJOR STRUCTURES		
ELECTRICAL			IRRIGATION/ WATER RESOURCES		
BUILDINGS			PHE / PLUMBING/ FIREFIGHTING		
ARCHITECTURE			MECHANICAL / HVAC		
CHECKED BY	SIGN	DATE	CHECKED BY	SIGN	DATE

FOR INTERNAL OFFICE ONLY

CONSULTANT
STUP Consultants Pvt. Ltd.
REGISTERED OFFICE : Unit No.2702, 27th Floor, Rupa Rendezvous, P.No.D-13 & D-207, Junagar, MIDC TTC Industrial Area, Turbhe, Navi Mumbai, Thane, Maharashtra-400705. Tel: +91 (022) 68067777, E-mail: mumbai@assystem.com
OFFICE OF ORIGIN : #69, JP & Devi Jambulesheor Arcade 4th Floor, Millers Road Bengaluru - 560 052 Tel.: 080 - 40 39 79 79 Email : bangalore@assystem.com

OWNER: BANGALORE DEVELOPMENT AUTHORITY

CONTRACTOR

PROJECT: CONSTRUCTION OF EIGHT LANE BENGALURU BUSINESS CORRIDOR (BBC)

TITLE: GENERAL ARRANGEMENT DRAWING FOR VIADUCT FROM CH. 4+265 TO CH. 4+995 KM (SHEET 1 OF 7)

DRG.NO.: N0533/E/MAJ/DD-501 (R1)

DATE	31/12/2025
DRAWN	VSK
PREPARED	AGA
CHECKED	MD
APPROVED	MD
SCALE:	AS SHOWN

DISCLAIMER: ONLY APPROVED AND SIGNED HARD COPIES SHALL BE USED FOR CONSTRUCTION

THIS DRAWING IS THE PROPERTY OF STUP CONSULTANTS Pvt. LTD. IT SHOULD NOT BE USED, COPIED, OR REPRODUCED WITHOUT THEIR WRITTEN PERMISSION.

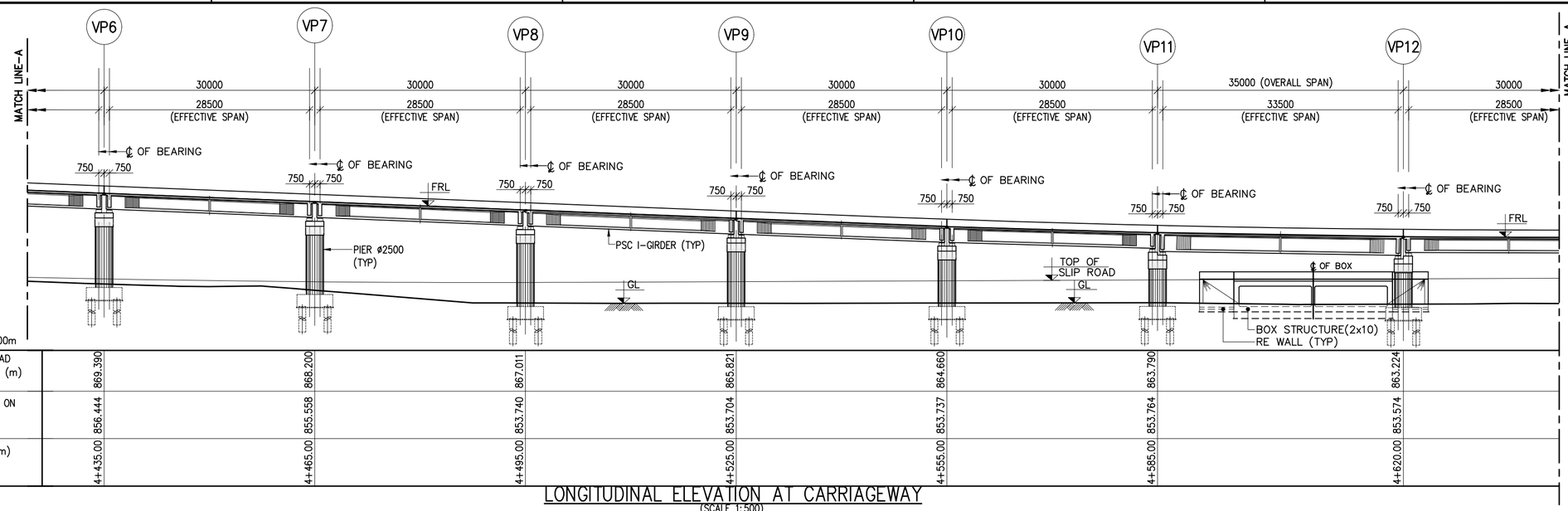

LONGITUDINAL ELEVATION AT CARRIAGEWAY
(SCALE 1:500)

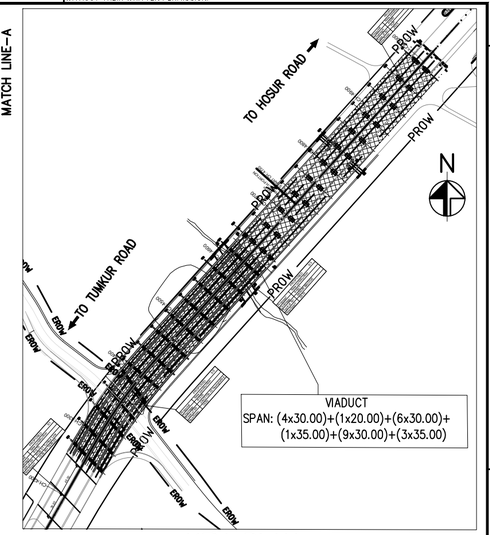

KEY PLAN
(SCALE 1:6000)

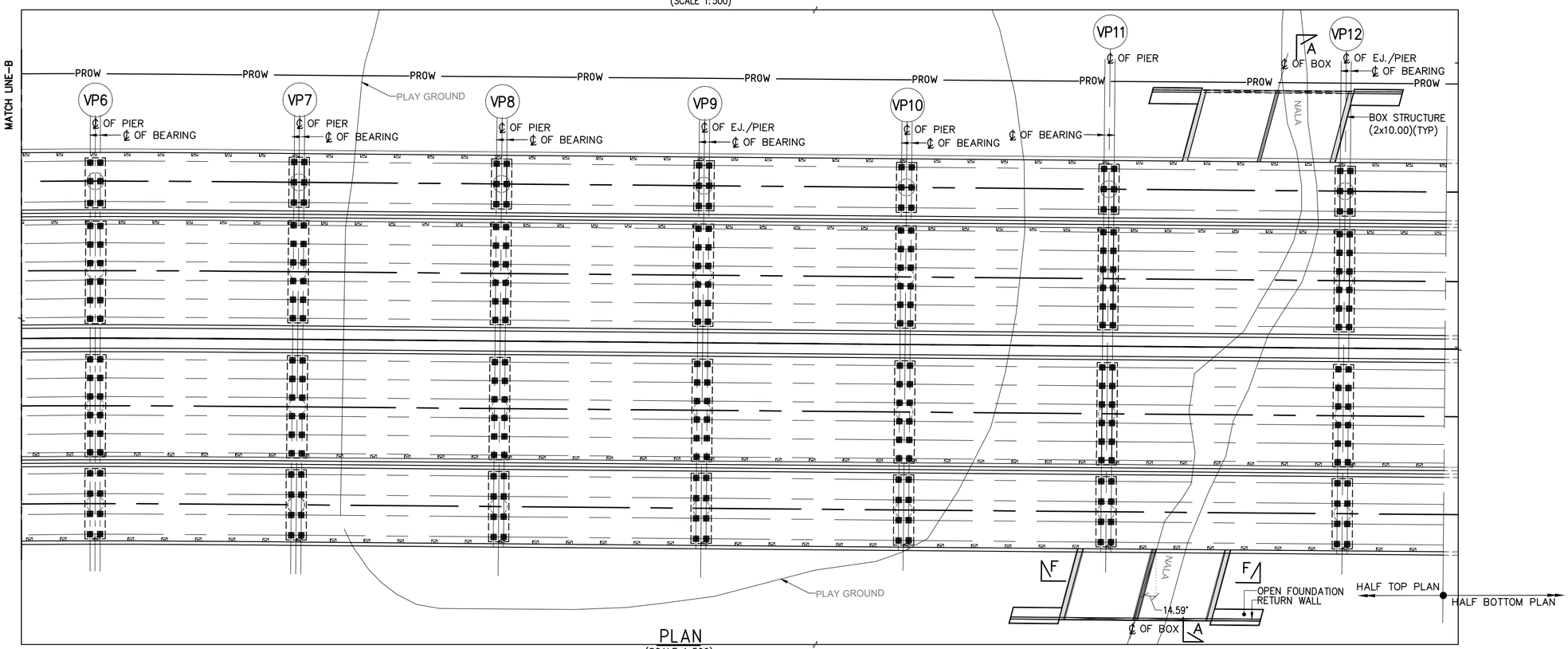

PLAN
(SCALE 1:500)

THE DIMENSIONS SHOWN ARE FOR TENDER PURPOSE ONLY

NOTES:

1. ALL DIMENSIONS ARE IN MILLIMETERS, LEVELS ARE IN METERS & CHAINAGES ARE IN KILOMETERS, UNLESS MENTIONED OTHERWISE.
2. DIMENSIONS ARE NOT TO BE SCALED OFF ONLY WRITTEN DIMENSIONS ARE TO BE FOLLOWED.

REFERENCE DRAWINGS: (LATEST REVISION)

N0533/E/MAJ/DD-501....	GENERAL ARRANGEMENT DRAWING FOR VIADUCT FROM CH 4+265 TO CH 4+995 KM (SHEET-1 OF 7)
N0533/E/MAJ/DD-503 TO 507....	GENERAL ARRANGEMENT DRAWING FOR VIADUCT FROM CH 4+265 TO CH 4+995 KM (SHEET-3 OF 7 TO SHEET-7 OF 7)

DATE	No.	REVISION	DRAWN	PREPARED	CHECKED	APPROVED
05/03/2026	R1	FOR APPROVAL	VSK	AGA	MD	MD
31/12/2025	R0	FIRST SUBMISSION	VSK	AGA	MD	MD

☑ APPROVAL ☐ CONSTRUCTION
☐ INFORMATION ☐ TENDER
☐ DRAFT ☐ PRELIMNARY

RELEASED FOR

	CHECKED BY	SIGN	DATE	CHECKED BY	SIGN	DATE
GIS						
HIGHWAYS				MAJOR STRUCTURES		
ELECTRICAL				IRRIGATION/ WATER RESOURCES		
BUILDINGS				PHE / PLUMBING/ FIREFIGHTING		
ARCHITECTURE				MECHANICAL / HVAC		

FOR INTERNAL OFFICE ONLY

CONSULTANT
STUP Consultants Pvt. Ltd.
REGISTERED OFFICE : Unit. No.2702, 27th Floor, Rupa Renaissance, P.No.D-33 & D-207, Juinagar, MOC TTC Industrial Area, Turbhe, Navi Mumbai, Thane, Maharashtra- 400705 Tel: +91 (022) 68067777, E-mail: mumbai@assystem.com
OFFICE OF ORIGIN : #69, JP & Devi Jambukeshwar Arcade 4th Floor, Millers Road Bengaluru - 560 052 Tel.: 080 - 40 39 79 79 Email : bangalore@assystem.com

OWNER: BANGALORE DEVELOPMENT AUTHORITY

CONTRACTOR

PROJECT: CONSTRUCTION OF EIGHT LANE BENGALURU BUSINESS CORRIDOR (BBC)

TITLE: GENERAL ARRANGEMENT DRAWING FOR VIADUCT FROM CH. 4+265 TO CH. 4+995 KM (SHEET 2 OF 7)

DRG.NO.: N0533/E/MAJ/DD-502 (R1)

DATE: 31/12/2025
DRAWN: VSK
PREPARED: AGA
CHECKED: MD
APPROVED: MD
SCALE: AS SHOWN

DISCLAIMER: ONLY APPROVED AND SIGNED HARD COPIES SHALL BE USED FOR CONSTRUCTION

THIS DRAWING IS THE PROPERTY OF STUP CONSULTANTS Pvt. LTD. IT SHOULD NOT BE USED, COPIED, OR REPRODUCED WITHOUT THEIR WRITTEN PERMISSION.

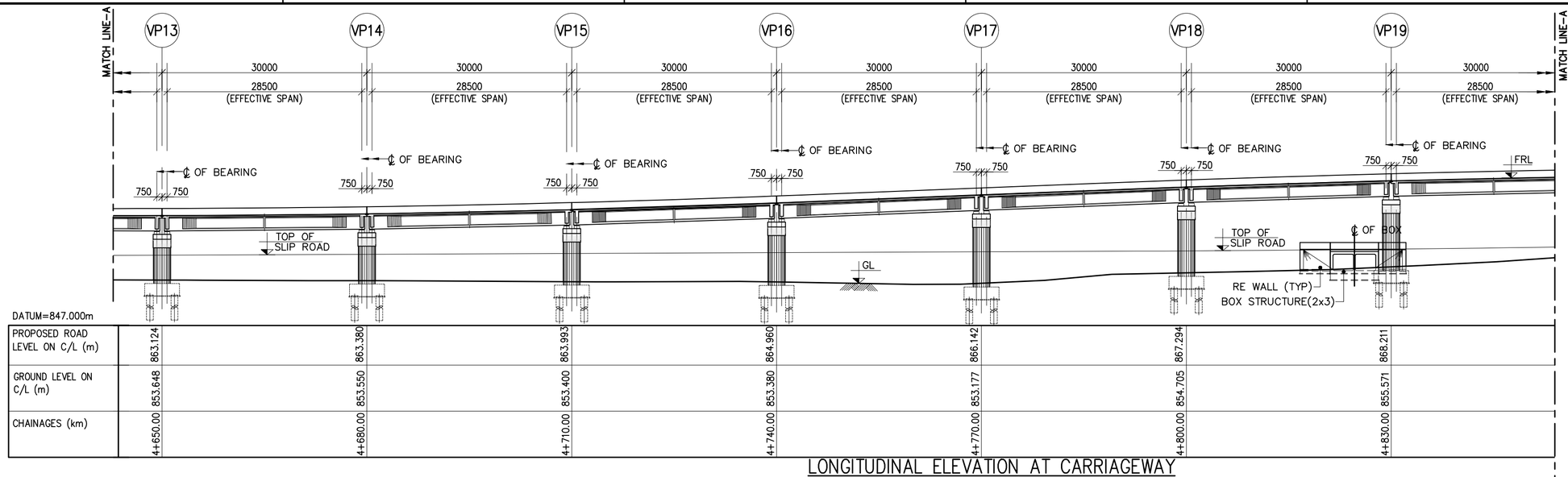

DATUM=847.000m							
PROPOSED ROAD LEVEL ON C/L (m)	863.124	863.380	863.993	864.960	866.142	867.294	868.211
GROUND LEVEL ON C/L (m)	853.648	853.550	853.400	853.380	853.177	854.705	855.571
CHAINAGES (km)	4+650.00	4+680.00	4+710.00	4+740.00	4+770.00	4+800.00	4+830.00

LONGITUDINAL ELEVATION AT CARRIAGEWAY
(SCALE 1:500)

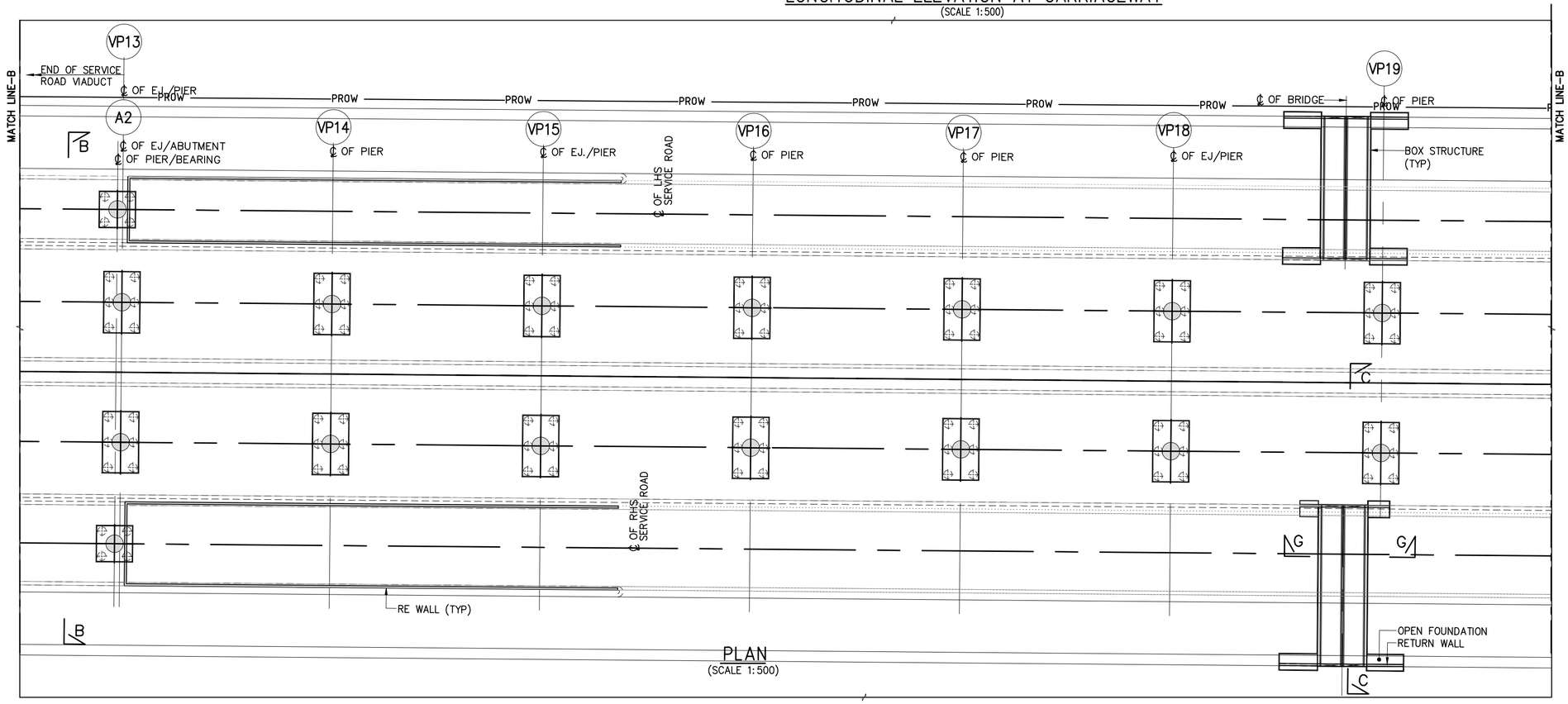

PLAN
(SCALE 1:500)

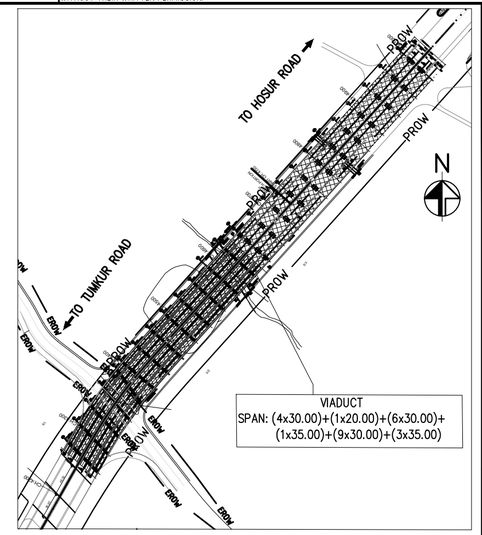

KEY PLAN
(SCALE 1:6000)

THE DIMENSIONS SHOWN ARE FOR TENDER PURPOSE ONLY

NOTES:

1. ALL DIMENSIONS ARE IN MILLIMETERS, LEVELS ARE IN METERS & CHAINAGES ARE IN KILOMETERS, UNLESS MENTIONED OTHERWISE.
2. DIMENSIONS ARE NOT TO BE SCALED OFF ONLY WRITTEN DIMENSIONS ARE TO BE FOLLOWED.

REFERENCE DRAWINGS: (LATEST REVISION)

N0533/E/MAJ/DD-501 & 502....	GENERAL ARRANGEMENT DRAWING FOR VIADUCT FROM CH 4+265 TO CH 4+995 KM (SHEET-1 OF 7 TO SHEET 2 OF 7)
N0533/E/MAJ/DD-504 TO 507....	GENERAL ARRANGEMENT DRAWING FOR VIADUCT FROM CH 4+265 TO CH 4+995 KM (SHEET-4 OF 7 TO SHEET-7 OF 7)

DATE	No.	REVISION	DRAWN	PREPARED	CHECKED	APPROVED
05/03/2026	R1	FOR APPROVAL	VSK	AGA	MD	MD
31/12/2025	R0	FIRST SUBMISSION	VSK	AGA	MD	MD

☑ APPROVAL ☐ CONSTRUCTION
☐ INFORMATION ☐ TENDER
☐ DRAFT ☐ PRELIMNARY

RELEASED FOR

GIS					
HIGHWAYS			MAJOR STRUCTURES		
ELECTRICAL			IRRIGATION/ WATER RESOURCES		
BUILDINGS			PHE / PLUMBING/ FIREFIGHTING		
ARCHITECTURE			MECHANICAL / HVAC		
CHECKED BY	SIGN	DATE	CHECKED BY	SIGN	DATE

FOR INTERNAL OFFICE ONLY

CONSULTANT
STUP Consultants Pvt. Ltd.
REGISTERED OFFICE : Unit No.2702, 27th Floor, Rupa Renaissance, P.No.D-33 & D-207, Juinagar, MDC TTC Industrial Area, Turbhe, Navi Mumbai, Thane, Maharashtra-400705. Tel: +91 (022) 68067777, E-mail: mumbai@assystem.com
OFFICE OF ORIGIN : #69, JP & Devi Jambulekshwar Arcade 4th Floor, Millers Road Bengaluru - 560 052 Tel.: 080 - 40 39 79 79 Email : bangalore@assystem.com

OWNER: BANGALORE DEVELOPMENT AUTHORITY

CONTRACTOR

PROJECT: CONSTRUCTION OF EIGHT LANE BENGALURU BUSINESS CORRIDOR (BBC)

TITLE: GENERAL ARRANGEMENT DRAWING FOR VIADUCT FROM CH. 4+265 TO CH. 4+995 KM (SHEET 3 OF 7)

DRG.NO.: N0533/E/MAJ/DD-503 (R1)

DATE: 31/12/2025
DRAWN: VSK
PREPARED: AGA
CHECKED: MD
APPROVED: MD
SCALE: AS SHOWN

DISCLAIMER: ONLY APPROVED AND SIGNED HARD COPIES SHALL BE USED FOR CONSTRUCTION

THIS DRAWING IS THE PROPERTY OF STUP CONSULTANTS Pvt. LTD. IT SHOULD NOT BE USED, COPIED, OR REPRODUCED WITHOUT THEIR WRITTEN PERMISSION.

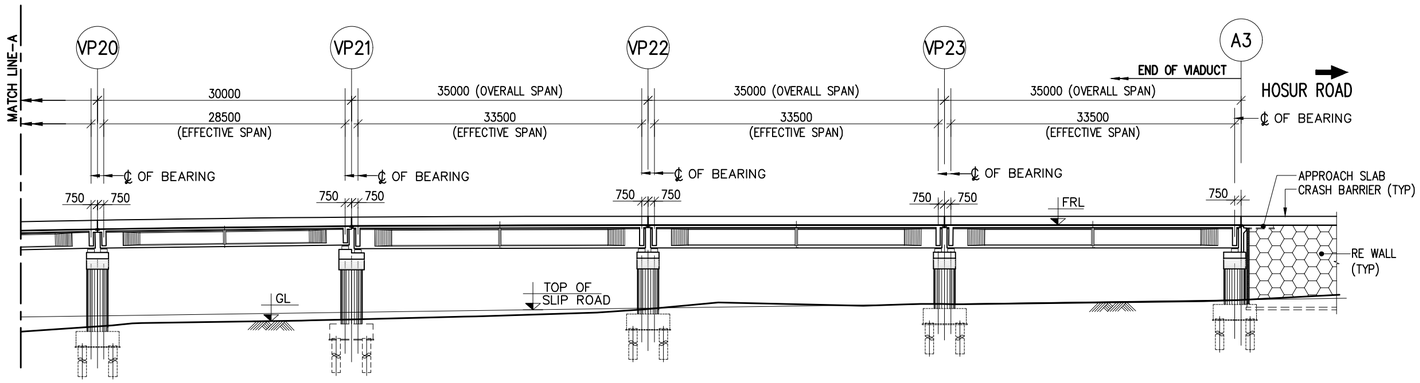

DATUM=847.000m

PROPOSED ROAD LEVEL ON C/L (m)	868.850	869.214	869.307	869.307	869.307
GROUND LEVEL ON C/L (m)	857.324	858.137	859.365	859.967	860.440
CHAINAGES (km)	4+860.00	4+890.00	4+925.00	4+960.00	4+995.00

LONGITUDINAL ELEVATION AT CARRIAGEWAY
(SCALE 1:500)

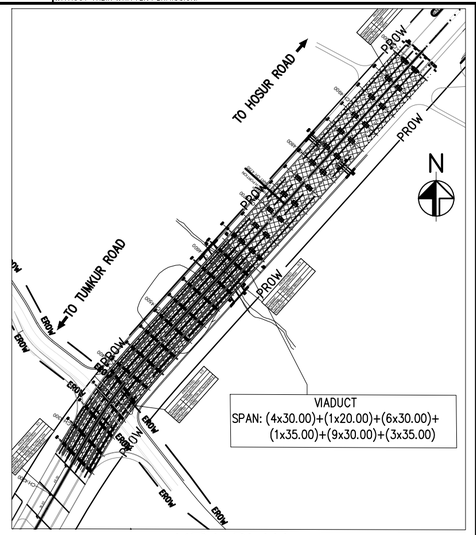

KEY PLAN
(SCALE 1:6000)

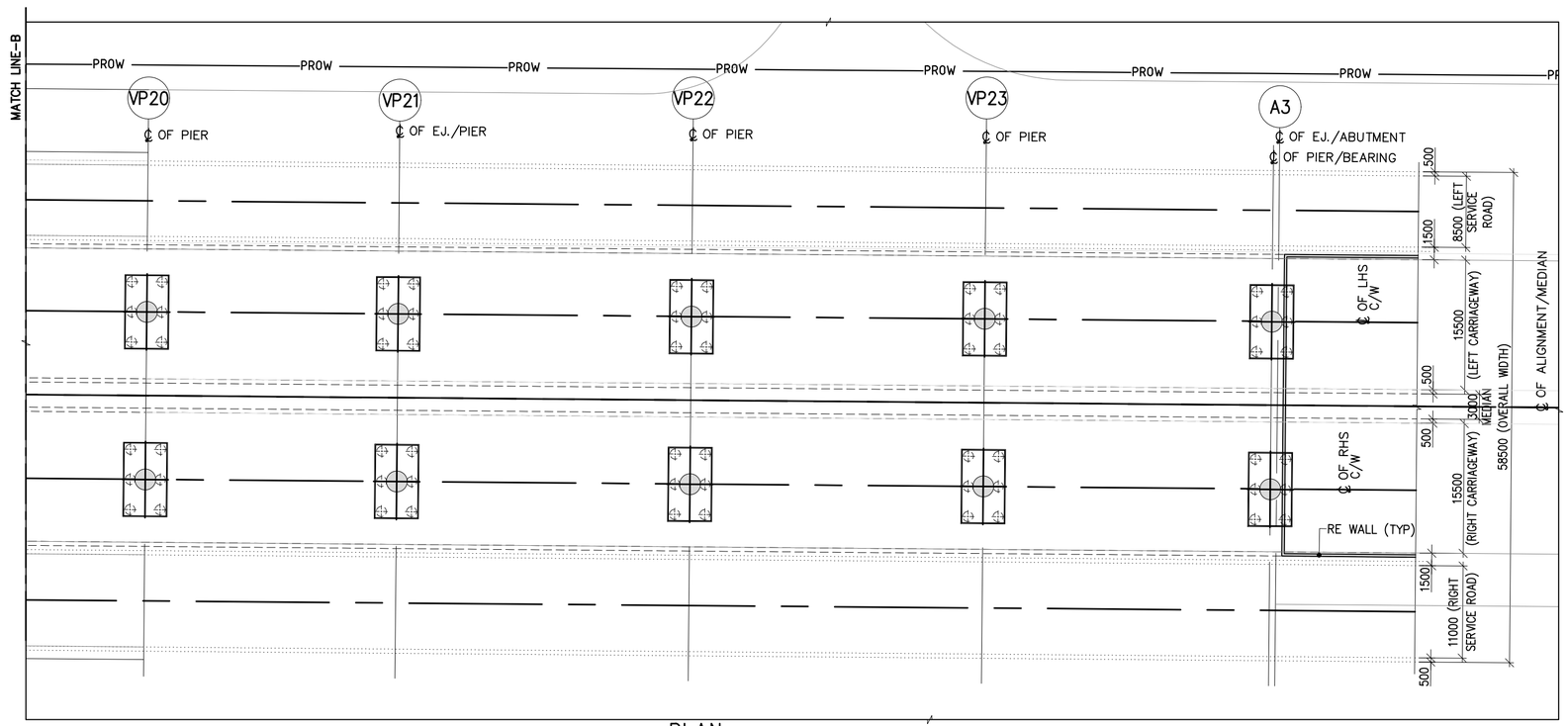

PLAN
(SCALE 1:500)

THE DIMENSIONS SHOWN ARE FOR TENDER PURPOSE ONLY

NOTES:

1. ALL DIMENSIONS ARE IN MILLIMETERS, LEVELS ARE IN METERS & CHAINAGES ARE IN KILOMETERS, UNLESS MENTIONED OTHERWISE.
2. DIMENSIONS ARE NOT TO BE SCALED OFF ONLY WRITTEN DIMENSIONS ARE TO BE FOLLOWED.

REFERENCE DRAWINGS: (LATEST REVISION)

N0533/E/MAJ/DD-501 TO 503....	GENERAL ARRANGEMENT DRAWING FOR VIADUCT FROM CH 4+265 TO CH 4+995 KM (SHEET-1 OF 7 TO SHEET 3 OF 7)
N0533/E/MAJ/DD-505 TO 507....	GENERAL ARRANGEMENT DRAWING FOR VIADUCT FROM CH 4+265 TO CH 4+995 KM (SHEET-5 OF 7 TO SHEET-7 OF 7)

DATE	No.	REVISION	DRAWN	PREPARED	CHECKED	APPROVED
05/03/2026	R1	FOR APPROVAL	VSK	AGA	MD	MD
31/12/2025	R0	FIRST SUBMISSION	VSK	AGA	MD	MD

☑ APPROVAL ☐ CONSTRUCTION
☐ INFORMATION ☐ TENDER
☐ DRAFT ☐ PRELIMNARY

RELEASED FOR

GIS					
HIGHWAYS			MAJOR STRUCTURES		
ELECTRICAL			IRRIGATION/ WATER RESOURCES		
BUILDINGS			PHE / PLUMBING/ FIREFIGHTING		
ARCHITECTURE			MECHANICAL / HVAC		
CHECKED BY	SIGN	DATE	CHECKED BY	SIGN	DATE

FOR INTERNAL OFFICE ONLY

CONSULTANT
STUP Consultants Pvt. Ltd.
REGISTERED OFFICE : Unit No.2702, 27th Floor, Rupa Renaissance, P.No.0-33 & 0-207, Juinagar, MIDC ITC Industrial Area, Turbhe, Navi Mumbai, Thane, Maharashtra-400705. Tel: +91 (022) 68067777, E-mail: mumbai@assystem.com
OFFICE OF ORIGIN : 4th, JP & Devi Jambukeshwar Arcade 4th Floor, Millers Road Bengaluru - 560 052 Tel.: 080 - 40 39 79 79 Email : bangalore@assystem.com

OWNER: BANGALORE DEVELOPMENT AUTHORITY

CONTRACTOR

PROJECT: CONSTRUCTION OF EIGHT LANE BENGALURU BUSINESS CORRIDOR (BBC)

TITLE: GENERAL ARRANGEMENT DRAWING FOR VIADUCT FROM CH. 4+265 TO CH. 4+995 KM (SHEET 4 OF 7)

DRG.NO.: N0533/E/MAJ/DD-504 (R1)

DATE: 31/12/2025
DRAWN: VSK
PREPARED: AGA
CHECKED: MD
APPROVED: MD
SCALE: AS SHOWN

DISCLAIMER: ONLY APPROVED AND SIGNED HARD COPIES SHALL BE USED FOR CONSTRUCTION

THIS DRAWING IS THE PROPERTY OF STUP CONSULTANTS Pvt. LTD. IT SHOULD NOT BE USED, COPIED, OR REPRODUCED WITHOUT THEIR WRITTEN PERMISSION.

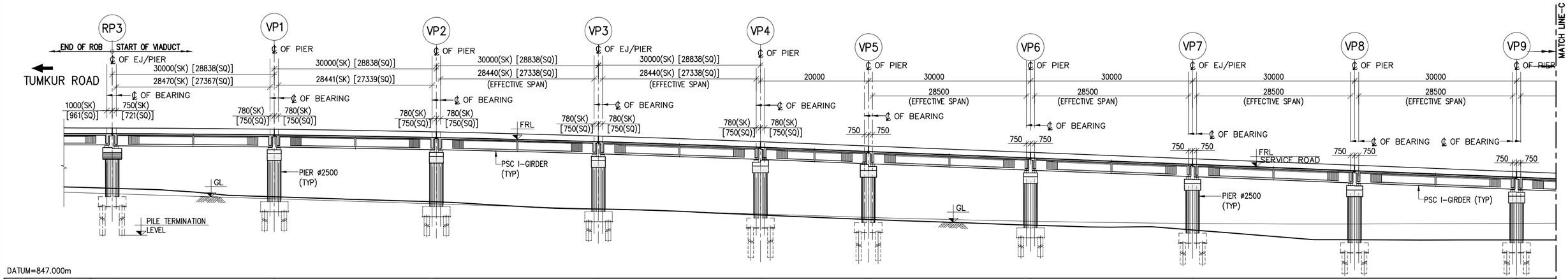

DATUM=847.000m

PROPOSED SERVICE ROAD LEVEL ON C/L (m)	873.446	873.225	872.730	871.958	870.913	870.120	868.930	867.741	866.551	865.361
GROUND LEVEL ON C/L (m)	863.271	861.699	860.764	859.436	858.329	857.488	856.454	855.558	853.740	853.704
CHAINAGES (km)	4+265.00	4+295.00	4+325.00	4+355.00	4+385.00	4+405.00	4+435.00	4+465.00	4+495.00	4+525.00

LONGITUDINAL ELEVATION AT SERVICE ROAD

(SCALE 1:500)

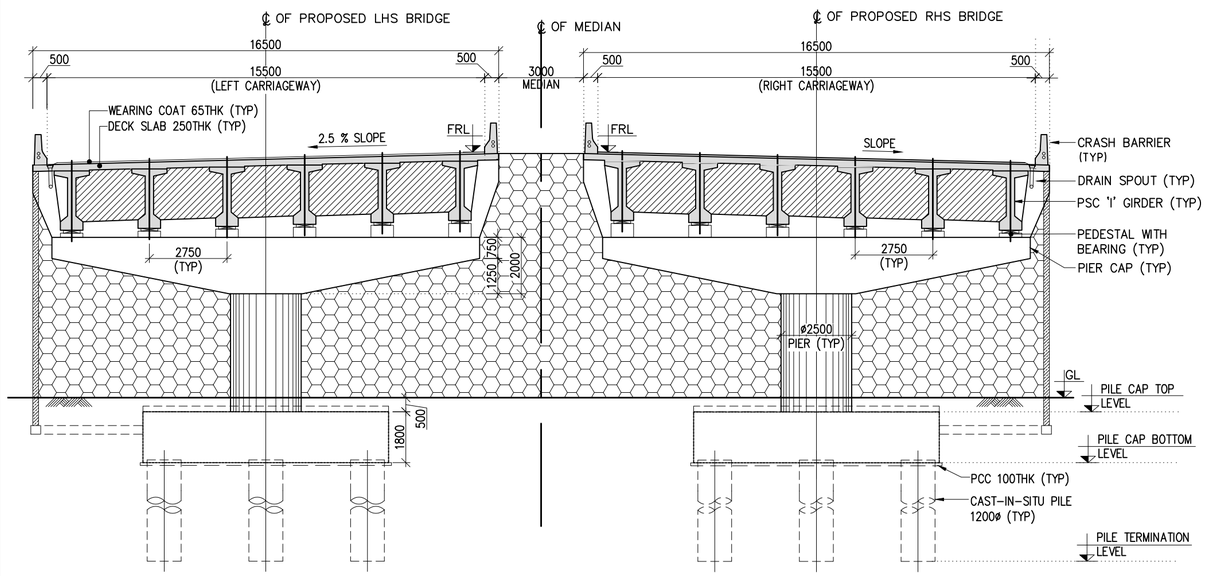

TYPICAL CROSS SECTION AT PIER ABUTMENT A3

(SCALE 1:150)

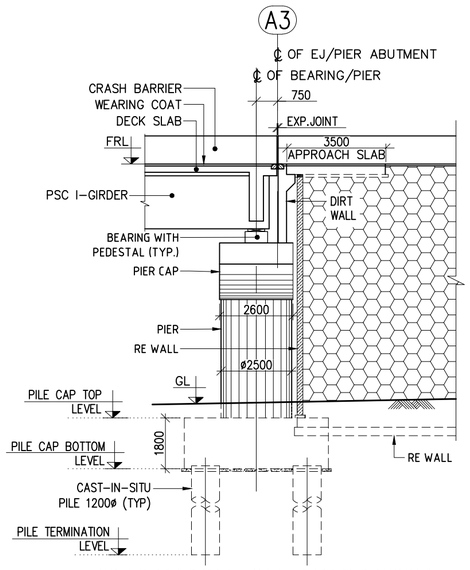

ELEVATION OF ABUTMENT

(SCALE 1:150)

NOTES:

1. ALL DIMENSIONS ARE IN MILLIMETERS, LEVELS ARE IN METERS & CHAINAGES ARE IN KILOMETERS, UNLESS MENTIONED OTHERWISE.
2. DIMENSIONS ARE NOT TO BE SCALED OFF ONLY WRITTEN DIMENSIONS ARE TO BE FOLLOWED.

REFERENCE DRAWINGS: (LATEST REVISION)

N0533/E/MAJ/DD-501 TO 504....	GENERAL ARRANGEMENT DRAWING FOR VIADUCT FROM CH 4+265 TO CH 4+995 KM (SHEET-1 OF 7 TO SHEET 4 OF 7)
N0533/E/MAJ/DD-506 TO 507....	GENERAL ARRANGEMENT DRAWING FOR VIADUCT FROM CH 4+265 TO CH 4+995 KM (SHEET-6 OF 7 TO SHEET-7 OF 7)

DATE	No.	REVISION	DRAWN	PREPARED	CHECKED	APPROVED
05/03/2026	R1	FOR APPROVAL	VSK	AGA	MD	MD
31/12/2025	R0	FIRST SUBMISSION	VSK	AGA	MD	MD

THE DIMENSIONS SHOWN ARE FOR TENDER PURPOSE ONLY

☑ APPROVAL	☐ CONSTRUCTION		
☐ INFORMATION	☐ TENDER		
☐ DRAFT	☐ PRELIMNARY		

RELEASED FOR

GIS					
HIGHWAYS			MAJOR STRUCTURES		
ELECTRICAL			IRRIGATION/ WATER RESOURCES		
BUILDINGS			PHE / PLUMBING/ FIREFIGHTING		
ARCHITECTURE			MECHANICAL / HVAC		
CHECKED BY	SIGN	DATE	CHECKED BY	SIGN	DATE

FOR INTERNAL OFFICE ONLY

CONSULTANT
STUP Consultants Pvt. Ltd.
REGISTERED OFFICE : Unit No.2702, 27th Floor, Rupa Renaissance, P.No.D-33 & D-207, Juinagar, MIDC TTC Industrial Area, Turbhe, Navi Mumbai, Thane, Maharashtra-400705. Tel: +91 (022) 68067777, E-mail: mumbai@assystem.com
OFFICE OF ORIGIN : #69, 3F & Devi Jambukeshwar Arcade 4th Floor, Millers Road Bengaluru – 560 052 Tel.: 080 – 40 39 79 79 Email : bangalore@assystem.com

OWNER: BANGALORE DEVELOPMENT AUTHORITY

DATE: 31/12/2025

CONTRACTOR

DRAWN: VSK

PROJECT: CONSTRUCTION OF EIGHT LANE BENGALURU BUSINESS CORRIDOR (BBC)

PREPARED: AGA

CHECKED: MD

TITLE: GENERAL ARRANGEMENT DRAWING FOR VIADUCT FROM CH. 4+265 TO CH. 4+995 KM (SHEET 5 OF 7)

APPROVED: MD

DRG.NO.: N0533/E/MAJ/DD-505 (R1)

SCALE: AS SHOWN

DISCLAIMER: ONLY APPROVED AND SIGNED HARD COPIES SHALL BE USED FOR CONSTRUCTION

THIS DRAWING IS THE PROPERTY OF STUP CONSULTANTS Pvt. LTD. IT SHOULD NOT BE USED, COPIED, OR REPRODUCED WITHOUT THEIR WRITTEN PERMISSION.

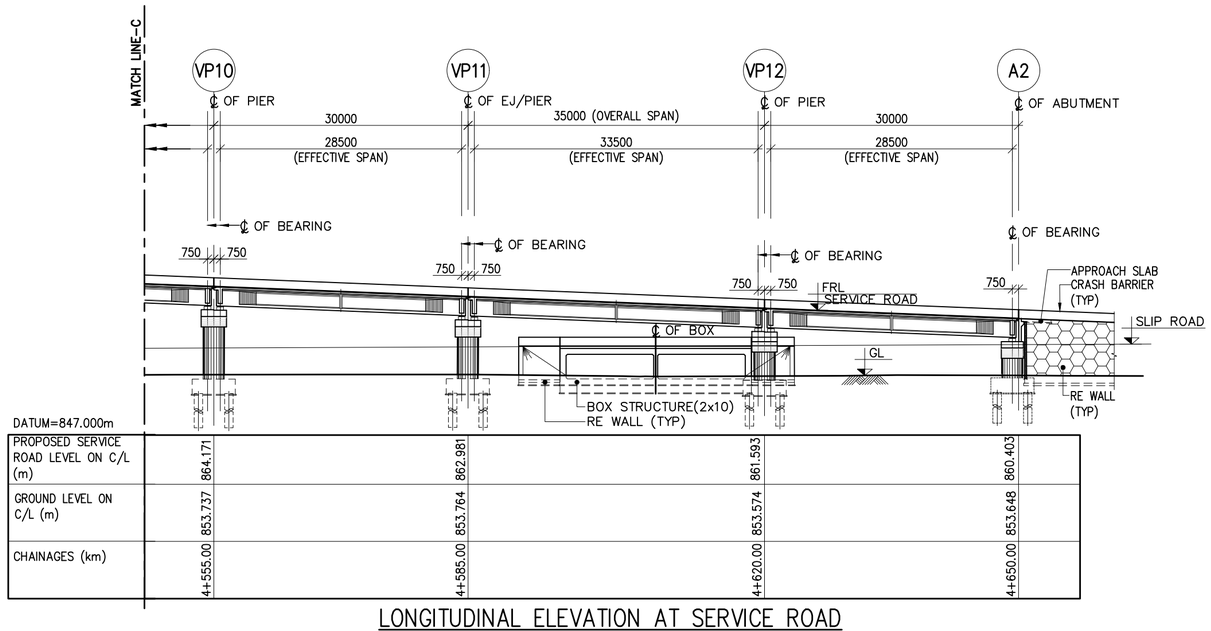

LONGITUDINAL ELEVATION AT SERVICE ROAD
(SCALE 1:500)

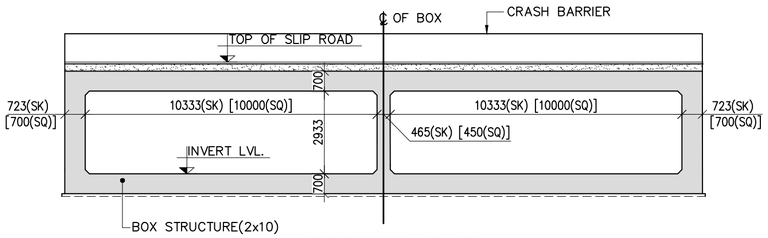

SECTION F–F
(SCALE 1:150)

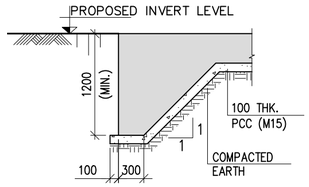

DETAIL–'X'
DETAILS OF SHEAR KEY
(SCALE 1:50)

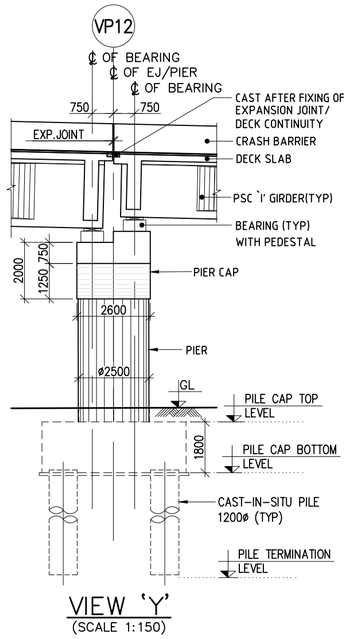

VIEW 'Y'
(SCALE 1:150)

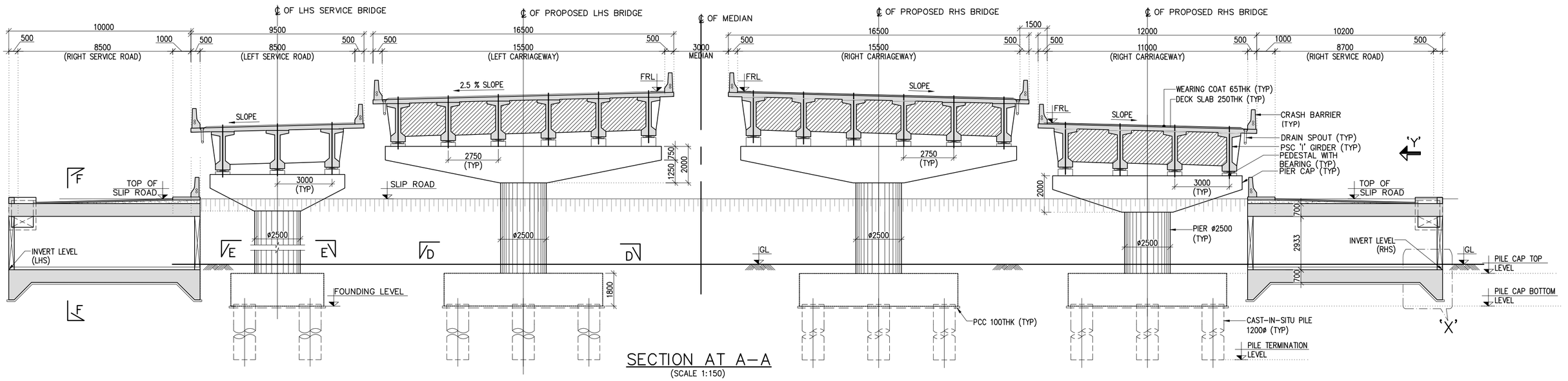

SECTION AT A–A
(SCALE 1:150)

THE DIMENSIONS SHOWN ARE FOR TENDER PURPOSE ONLY

NOTES:

1. ALL DIMENSIONS ARE IN MILLIMETERS, LEVELS ARE IN METERS & CHAINAGES ARE IN KILOMETERS, UNLESS MENTIONED OTHERWISE.
2. DIMENSIONS ARE NOT TO BE SCALED OFF ONLY WRITTEN DIMENSIONS ARE TO BE FOLLOWED.

REFERENCE DRAWINGS: (LATEST REVISION)

N0533/E/MAJ/DD-501 TO 505....	GENERAL ARRANGEMENT DRAWING FOR VIADUCT FROM CH 4+265 TO CH 4+995 KM (SHEET-1 OF 7 TO SHEET 5 OF 7)
N0533/E/MAJ/DD-507....	GENERAL ARRANGEMENT DRAWING FOR VIADUCT FROM CH 4+265 TO CH 4+995 KM (SHEET-7 OF 7)

DATE	No.	REVISION	DRAWN	PREPARED	CHECKED	APPROVED
05/03/2026	R1	FOR APPROVAL	VSK	AGA	MD	MD
31/12/2025	R0	FIRST SUBMISSION	VSK	AGA	MD	MD

☑ APPROVAL ☐ CONSTRUCTION
☐ INFORMATION ☐ TENDER
☐ DRAFT ☐ PRELIMNARY

RELEASED FOR

GIS					
HIGHWAYS			MAJOR STRUCTURES		
ELECTRICAL			IRRIGATION/ WATER RESOURCES		
BUILDINGS			PHE / PLUMBING/ FIREFIGHTING		
ARCHITECTURE			MECHANICAL / HVAC		
CHECKED BY	SIGN	DATE	CHECKED BY	SIGN	DATE

FOR INTERNAL OFFICE ONLY

CONSULTANT
STUP Consultants Pvt. Ltd.
REGISTERED OFFICE : Unit No.2702, 27th Floor, Rupa Renaissance, P.No.D-33 & D-207, Juinagar, MIDC TTC Industrial Area, Turbhe, Navi Mumbai, Thane, Maharashtra- 400705. Tel: +91 (022) 68067777, E-mail: mumbai@assystem.com
OFFICE OF ORIGIN : #65, JP & Devi Jambukeshwar Arcade 4th Floor, Millers Road Bengaluru – 560 052 Tel.: 080 – 40 39 79 79 Email : bangalore@assystem.com

OWNER: BANGALORE DEVELOPMENT AUTHORITY

CONTRACTOR

PROJECT: CONSTRUCTION OF EIGHT LANE BENGALURU BUSINESS CORRIDOR (BBC)

TITLE: GENERAL ARRANGEMENT DRAWING FOR VIADUCT FROM CH. 4+265 TO CH. 4+995 KM (SHEET 6 OF 7)

DRG.NO.: N0533/E/MAJ/DD-506 (R1)

DATE: 31/12/2025
DRAWN: VSK
PREPARED: AGA
CHECKED: MD
APPROVED: MD
SCALE: AS SHOWN

DISCLAIMER: ONLY APPROVED AND SIGNED HARD COPIES SHALL BE USED FOR CONSTRUCTION

THIS DRAWING IS THE PROPERTY OF STUP CONSULTANTS Pvt. LTD. IT SHOULD NOT BE USED, COPIED, OR REPRODUCED WITHOUT THEIR WRITTEN PERMISSION.

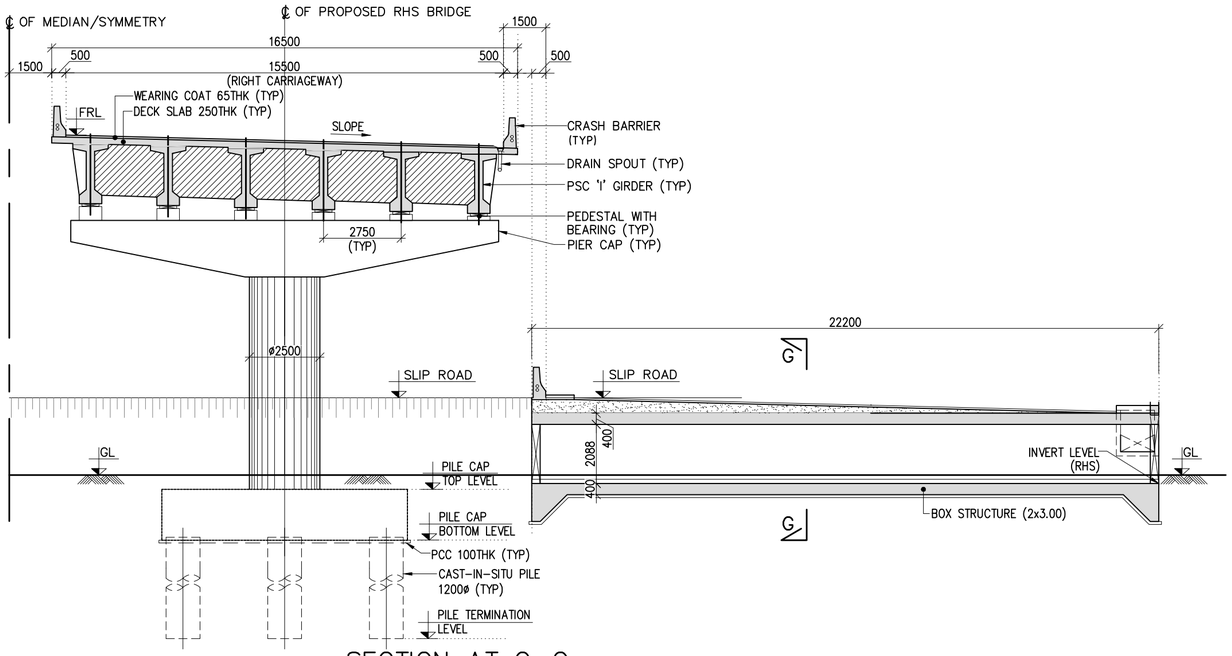

SECTION AT C–C
(SCALE 1:150)

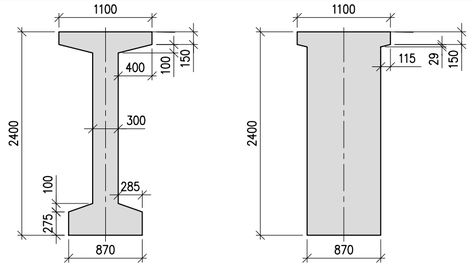

(AT MID SPAN) (AT SUPPORT)

CROSS SECTION OF PSC 'I' GIRDER FOR 35m SPAN
(SCALE 1:50)

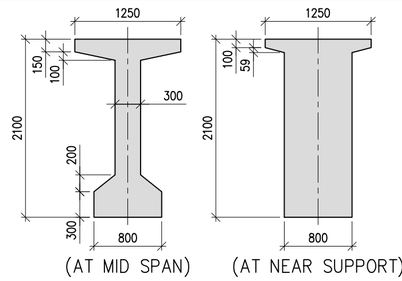

(AT MID SPAN) (AT NEAR SUPPORT)

DETAIL OF PRECAST PSC I-GIRDER FOR 30m SPAN
(SCALE 1:50)

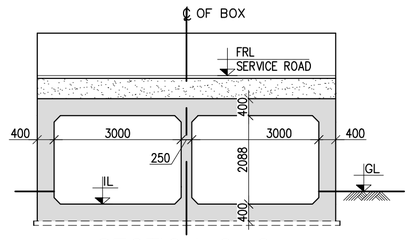

SECTION G–G
(SCALE 1:100)

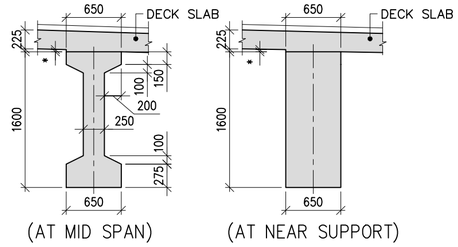

(AT MID SPAN) (AT NEAR SUPPORT)

CROSS SECTION OF RCC 'I' GIRDER FOR 20m SPAN
(SCALE 1:50)

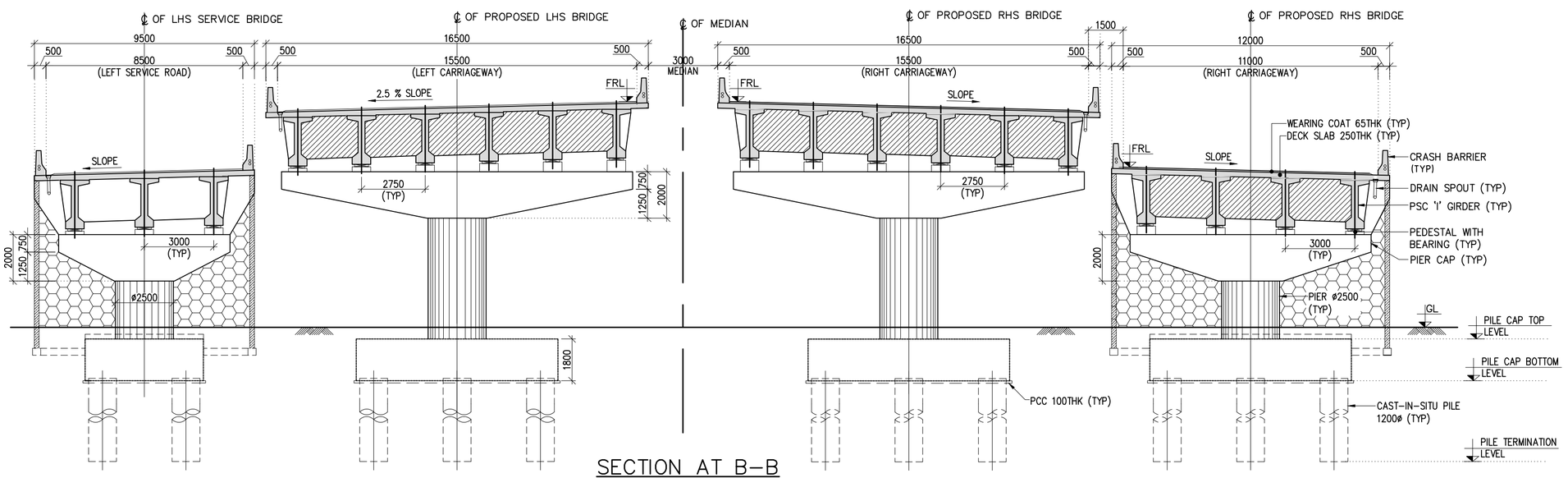

SECTION AT B–B
(SCALE 1:150)

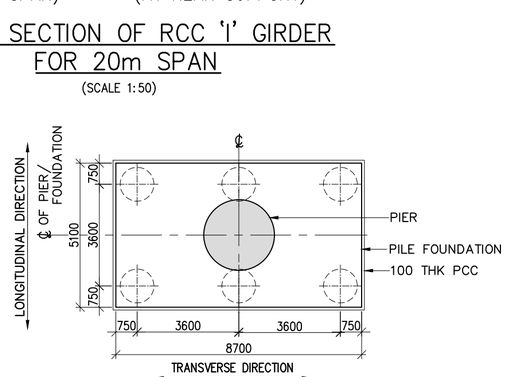

PLAN AT D–D
(SCALE 1:150)

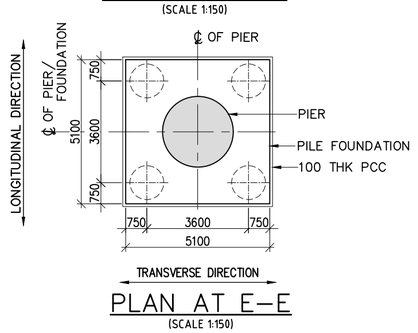

PLAN AT E–E
(SCALE 1:150)

THE DIMENSIONS SHOWN ARE FOR TENDER PURPOSE ONLY

NOTES:

1. ALL DIMENSIONS ARE IN MILLIMETERS, LEVELS ARE IN METERS & CHAINAGES ARE IN KILOMETERS, UNLESS MENTIONED OTHERWISE.
2. DIMENSIONS ARE NOT TO BE SCALED OFF ONLY WRITTEN DIMENSIONS ARE TO BE FOLLOWED.

REFERENCE DRAWINGS: (LATEST REVISION)

N0533/E/MAJ/DD–501 TO 506.... GENERAL ARRANGEMENT DRAWING FOR VIADUCT FROM CH 4+265 TO CH 4+995 KM (SHEET–1 OF 7 TO SHEET 6 OF 7)

DATE	No.	REVISION	DRAWN	PREPARED	CHECKED	APPROVED
05/03/2026	R1	FOR APPROVAL	VSK	AGA	MD	MD
31/12/2025	R0	FIRST SUBMISSION	VSK	AGA	MD	MD

☑ APPROVAL ☐ CONSTRUCTION
☐ INFORMATION ☐ TENDER
☐ DRAFT ☐ PRELIMNARY

RELEASED FOR

GIS						
HIGHWAYS			MAJOR STRUCTURES			
ELECTRICAL			IRRIGATION/ WATER RESOURCES			
BUILDINGS			PHE / PLUMBING/ FIREFIGHTING			
ARCHITECTURE			MECHANICAL / HVAC			
CHECKED BY	SIGN	DATE	CHECKED BY	SIGN	DATE	

FOR INTERNAL OFFICE ONLY

CONSULTANT
STUP Consultants Pvt. Ltd.
REGISTERED OFFICE : Unit. No.2702, 27th Floor, Rupa Renaissance, P.No.D–33 & D–207, Juinagar, MIDC TTC Industrial Area, Turbhe, Navi Mumbai, Thane, Maharashtra– 400705. Tel: +91 (022) 68067777, E–mail: mumbai@assystem.com
OFFICE OF ORIGIN : #69, JP & Devi Jambulesthwar Arcade 4th Floor, Millers Road Bengaluru – 560 052 Tel.: 080 – 40 39 79 79 Email : bangalore@assystem.com

OWNER: BANGALORE DEVELOPMENT AUTHORITY

CONTRACTOR

PROJECT: CONSTRUCTION OF EIGHT LANE BENGALURU BUSINESS CORRIDOR (BBC)

TITLE: GENERAL ARRANGEMENT DRAWING FOR VIADUCT FROM CH. 4+265 TO CH. 4+995 KM (SHEET 7 OF 7)

DRG.NO.: N0533/E/MAJ/DD–507 (R1)

DATE: 31/12/2025
DRAWN: VSK
PREPARED: AGA
CHECKED: MD
APPROVED: MD
SCALE: AS SHOWN

DISCLAIMER: ONLY APPROVED AND SIGNED HARD COPIES SHALL BE USED FOR CONSTRUCTION

THIS DRAWING IS THE PROPERTY OF STUP CONSULTANTS Pvt. LTD. IT SHOULD NOT BE USED, COPIED, OR REPRODUCED WITHOUT THEIR WRITTEN PERMISSION.

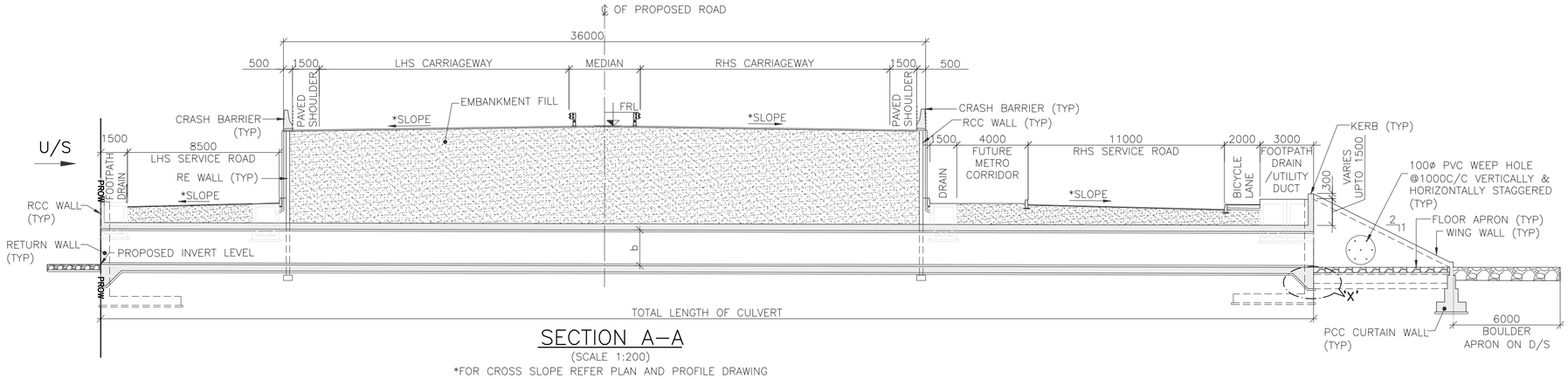

SECTION A–A

(SCALE 1:200)

*FOR CROSS SLOPE REFER PLAN AND PROFILE DRAWING

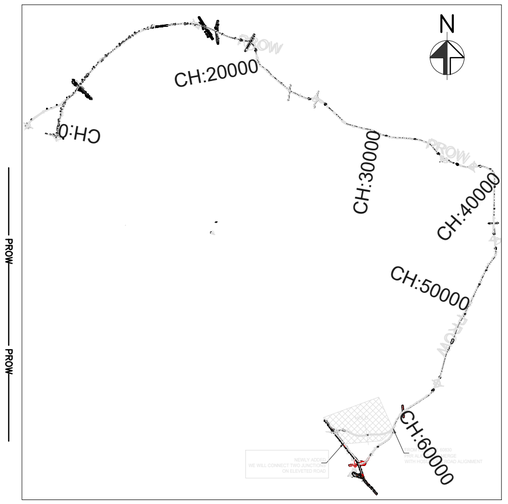

KEY PLAN

(SCALE : 1:1500)

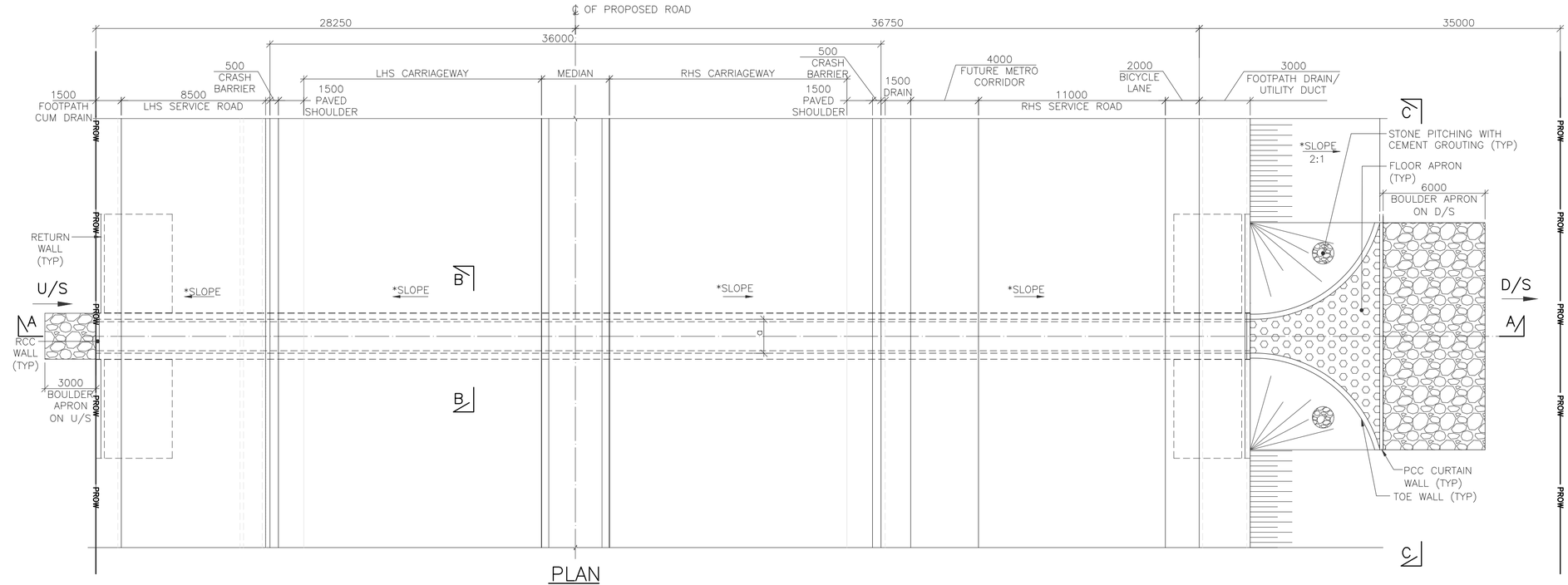

PLAN

(SCALE 1:200)

*FOR CROSS SLOPE REFER PLAN AND PROFILE DRAWING

NOTES:

1. ALL DIMENSIONS ARE IN MILLIMETERS, LEVELS ARE IN METERS & CHAINAGES ARE IN KILOMETERS, UNLESS MENTIONED OTHERWISE.
2. DIMENSIONS ARE NOT TO BE SCALED OFF ONLY WRITTEN DIMENSIONS ARE TO BE FOLLOWED.
3. MATERIALS:
   a) CONCRETE – RCC = M25
      PCC = M15
   b) REINFORCING STEEL– Fe 500 CONFORMING TO IS:1786–2008.
4. BACKFILLING SHALL BE DONE SIMULTANEOUSLY ON BOTH APPROACHES IN EQUAL HEIGHTS.
5. NALLAH/DRAIN TO BE DIVERTED AS PER SITE CONDITION.
6. U/S & D/S TO BE VERIFIED AS PER SITE CONDITION.
7. POSITIVE SKEW ANGLE DENOTES CLOCKWISE ANGLE AND NEGATIVE SKEW ANGLE DENOTES ANTICLOCKWISE ANGLE.
8. DIMENSION OF STRUCTURAL MEMBERS SHOWN ARE INDICATIVE ONLY WHICH SHALL BE CONSIDERED BASED ON DETAILED DESIGN.
9. ABOVE DETAILS ARE OF TYPICAL NATURE TO INDICATE THE TYPE OF STRUCTURE AND SPACING OF STRUCTURAL MEMBER. ACTUAL CONSTRUCTION DESIGN MAY BE DIFFERENT BASED ON SITE CONDITIONS.
10. FOR CAMBER/SUPERELEVATION AND CROSS SECTION OF HIGHWAY AT SPECIFIC STRUCTURE LOCATIONS, RELEVANT TYPICAL CROSS SECTION DRAWING SHALL BE REFERRED.

LEGEND:

1) FRL – FINISHED ROAD LEVEL
2) TYP – TYPICAL
3) NGL – NATURAL GROUND LEVEL
4) LHS – LEFT HAND SIDE
5) U/S – UPSTREAM
6) D/S – DOWNSTREAM

REFERENCE DRAWINGS: (LATEST REVISION)

N0533/E/MAJ/DD–602 .... TYPICAL SINGLE CELL BOX CULVERT VARIABLE FILLING GENERAL ARRANGEMENT DRAWING (SHEET 2 OF 2)

THE DIMENSIONS SHOWN ARE FOR TENDER PURPOSE ONLY

NOTES:

DATE	No.	REVISION	DRAWN	PREPARED	CHECKED	APPROVED
04–01–26	R0	FIRST SUBMISSION	SSA	AGA	MD	MD

☑ APPROVAL	☐ CONSTRUCTION		
☐ INFORMATION	☐ TENDER		
☐ DRAFT	☐ PRELIMNARY		

RELEASED FOR

GIS						
HIGHWAYS			MAJOR STRUCTURES			
ELECTRICAL			IRRIGATION/ WATER RESOURCES			
BUILDINGS			PHE / PLUMBING/ FIREFIGHTING			
ARCHITECTURE			MECHANICAL / HVAC			
CHECKED BY	SIGN	DATE	CHECKED BY	SIGN	DATE	

FOR INTERNAL OFFICE ONLY

CONSULTANT
STUP Consultants Pvt. Ltd.
REGISTERED OFFICE : Unit No.1702, 27th Floor, Rupa Renaissance, P.No.D–33 & D–207, Juinagar, MIDC TTC Industrial Area, Turbhe, Navi Mumbai, Thane, Maharashtra–400705. Tel: +91 (022) 68067777, E–mail: mumbai@assystem.com
OFFICE OF ORIGIN : #69, JP & Devi Jambukeshwar Arcade 4th Floor, Millers Road Bengaluru – 560 052 Tel.: 080 – 40 39 79 79 Email : bangalore@assystem.com

OWNER: BANGALORE DEVELOPMENT AUTHORITY

DATE: 04–01–2026

CONTRACTOR

DRAWN: SSA

PROJECT: CONSTRUCTION OF EIGHT LANE BENGALURU BUSINESS CORRIDOR (BBC)

PREPARED: AGA

CHECKED: MD

TITLE: TYPICAL SINGLE CELL BOX CULVERT VARIABLE FILLING GENERAL ARRANGEMENT DRAWING (SHEET 1 OF 2)

APPROVED: MD

DRG.NO.: N0533/E/MAJ/DD–601 (R0)

SCALE: AS SHOWN

DISCLAIMER: ONLY APPROVED AND SIGNED HARD COPIES SHALL BE USED FOR CONSTRUCTION

THIS DRAWING IS THE PROPERTY OF STUP CONSULTANTS Pvt. LTD. IT SHOULD NOT BE USED, COPIED, OR REPRODUCED WITHOUT THEIR WRITTEN PERMISSION.

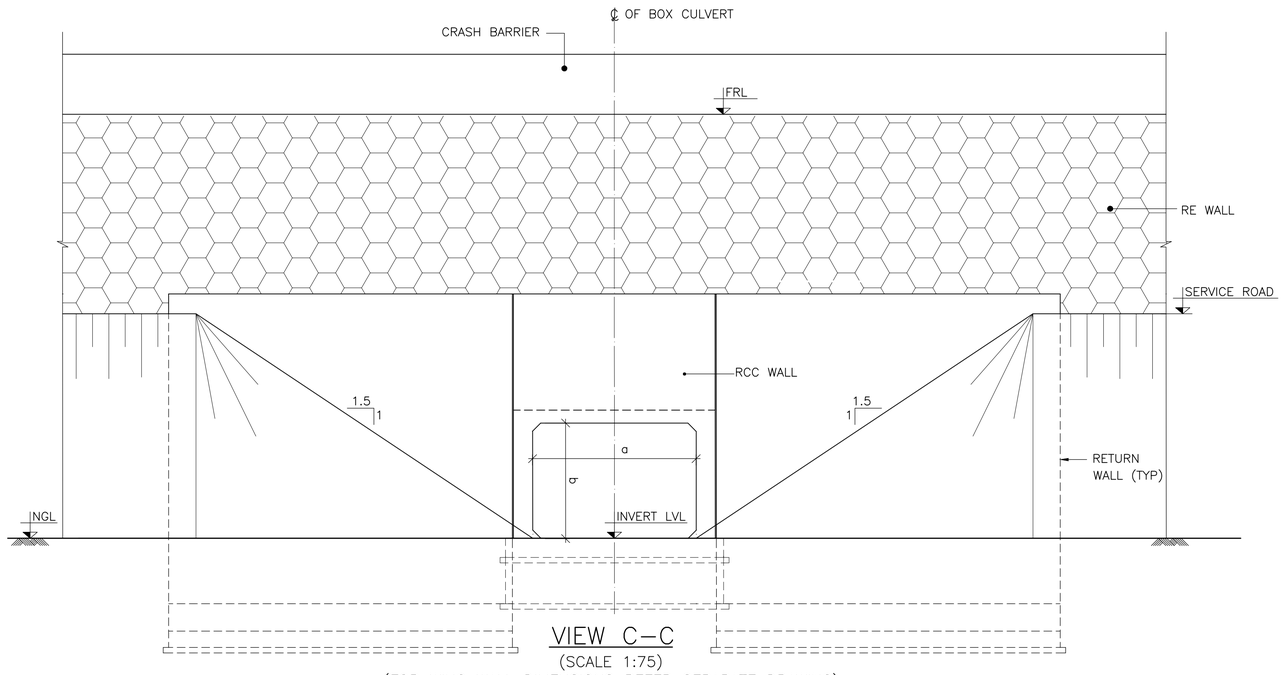

VIEW C–C
(SCALE 1:75)
(FOR WING WALL DIMENSIONS REFER SEPARATE DRAWING)

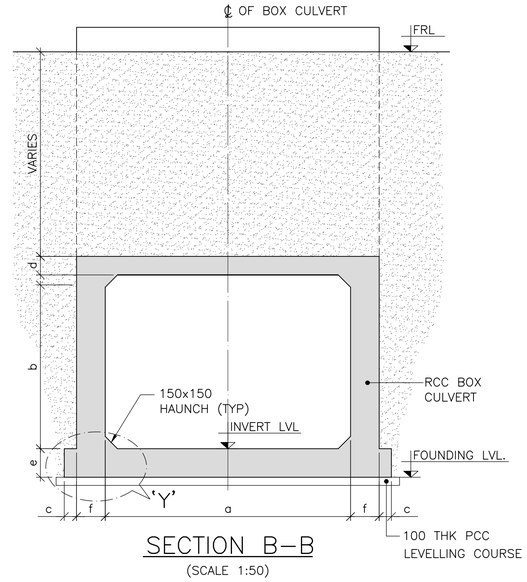

SECTION B–B
(SCALE 1:50)

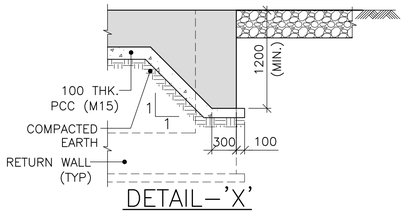

DETAIL–'X'
DETAILS OF SHEAR KEY
(SCALE 1:50)

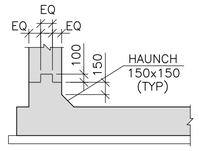

DETAIL–'Y'
(SCALE 1:50)

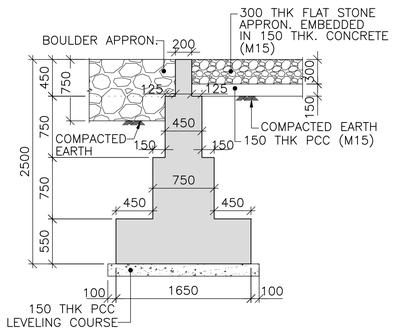

TYPICAL CROSS SECTION OF CURTAIN WALL
(DOWN STREAM SIDE)
(SCALE 1:50)

SR. NO.	CD. NO.	PROPOSED CHAINAGE (km)	SPAN ARRANGEMENT (m) (SQUARE DIMENSION)	PROPOSED FRL AT MEDIAN EDGE (m)	PROPOSED INVERT LEVEL (m)	EMBANKMENT FILL (m)	SKEW ANGLE (DEGREE)	PROPOSED FORMATION WIDTH (m)			DIMENSIONS OF PROPOSED BOX (m) (SQUARE DIMENSIONS)					
									MAIN CARRIAGEWAY							
								MEDIAN	LHS	RHS	a	b	c	d	e	f
1	7/1	6+440	1x2x2	885.447	877.670	5.427	0	4	14	14	2	2	0.150	0.350	0.350	0.350
2	13/1	12+804	1x3x2	925.908	917.712	5.68	0	4	14	14	3	2	0.150	0.300	0.300	0.300

THE DIMENSIONS SHOWN ARE FOR TENDER PURPOSE ONLY

NOTES:
1. FOR NOTES REFER DRAWING NO. N0533/E/MAJ/DD–601 (SHEET 1 OF 2)

REFERENCE DRAWINGS: (LATEST REVISION)
N0533/E/MAJ/DD–601 .... TYPICAL SINGLE CELL BOX CULVERT VARIABLE FILLING GENERAL ARRANGEMENT DRAWING (SHEET 1 OF 2)

DATE	No.	REVISION	DRAWN	PREPARED	CHECKED	APPROVED
04–01–26	R0	FIRST SUBMISSION	SSA	AGA	MD	MD

☑ APPROVAL ☐ CONSTRUCTION
☐ INFORMATION ☐ TENDER
☐ DRAFT ☐ PRELIMNARY

RELEASED FOR

GIS					
HIGHWAYS			MAJOR STRUCTURES		
ELECTRICAL			IRRIGATION/ WATER RESOURCES		
BUILDINGS			PHE / PLUMBING/ FIREFIGHTING		
ARCHITECTURE			MECHANICAL / HVAC		
CHECKED BY	SIGN	DATE	CHECKED BY	SIGN	DATE

FOR INTERNAL OFFICE ONLY

CONSULTANT
STUP Consultants Pvt. Ltd.
REGISTERED OFFICE : Unit No.2702, 27th Floor, Rare Rendezvous, P.No.D–33 & D–207, Juinagar, MIDC TTC Industrial Area, Turbhe, Navi Mumbai, Thane, Maharashtra–400705. Tel: +91 (022) 68067777, E–mail: mumbai@assystem.com
OFFICE OF ORIGIN : #69, JP & Devi Jambukeshwar Arcade 4th Floor, Millers Road Bengaluru – 560 052 Tel.: 080 – 40 39 79 79 Email : bangalore@assystem.com

OWNER: BANGALORE DEVELOPMENT AUTHORITY

DATE: 04–01–2026

CONTRACTOR

DRAWN: SSA

PROJECT: CONSTRUCTION OF EIGHT LANE BENGALURU BUSINESS CORRIDOR (BBC)

PREPARED: AGA

CHECKED: MD

TITLE: TYPICAL SINGLE CELL BOX CULVERT VARIABLE FILLING GENERAL ARRANGEMENT DRAWING (SHEET 2 OF 2)

APPROVED: MD

DRG.NO.: N0533/E/MAJ/DD–602 (R0)

SCALE: AS SHOWN

DISCLAIMER: ONLY APPROVED AND SIGNED HARD COPIES SHALL BE USED FOR CONSTRUCTION

THIS DRAWING IS THE PROPERTY OF STUP CONSULTANTS Pvt. LTD. IT SHOULD NOT BE USED, COPIED, OR REPRODUCED WITHOUT THEIR WRITTEN PERMISSION.

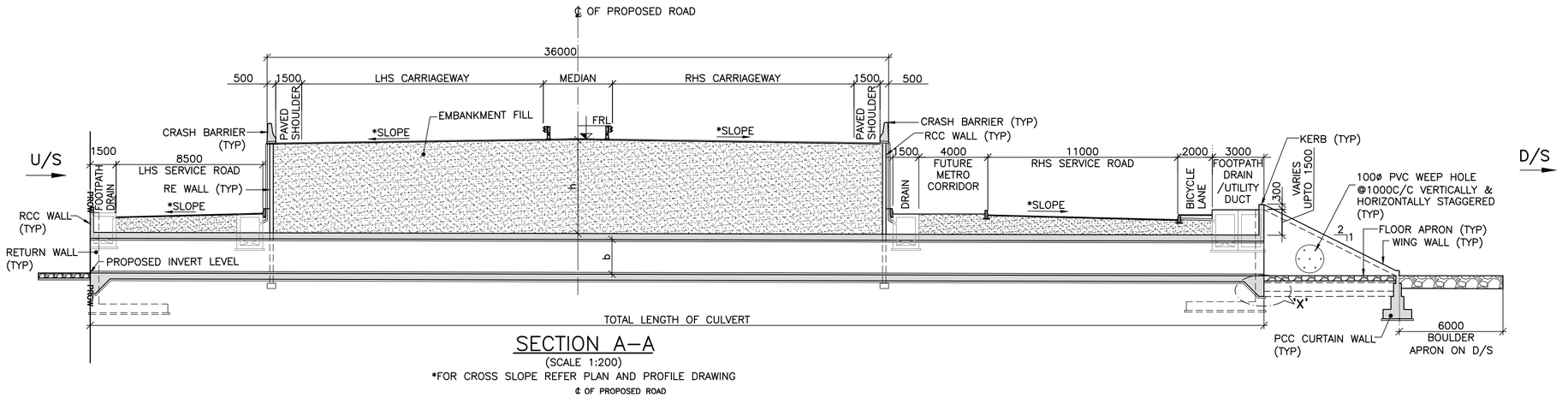

SECTION A–A

(SCALE 1:200)

*FOR CROSS SLOPE REFER PLAN AND PROFILE DRAWING

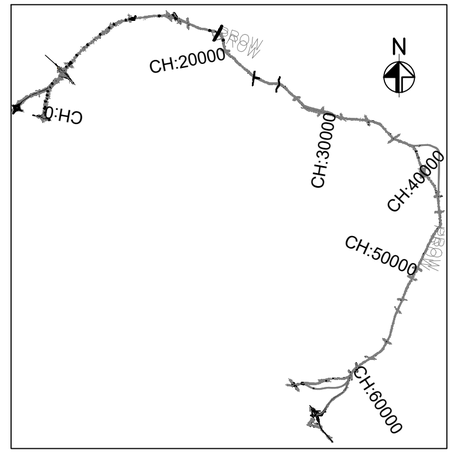

KEY PLAN

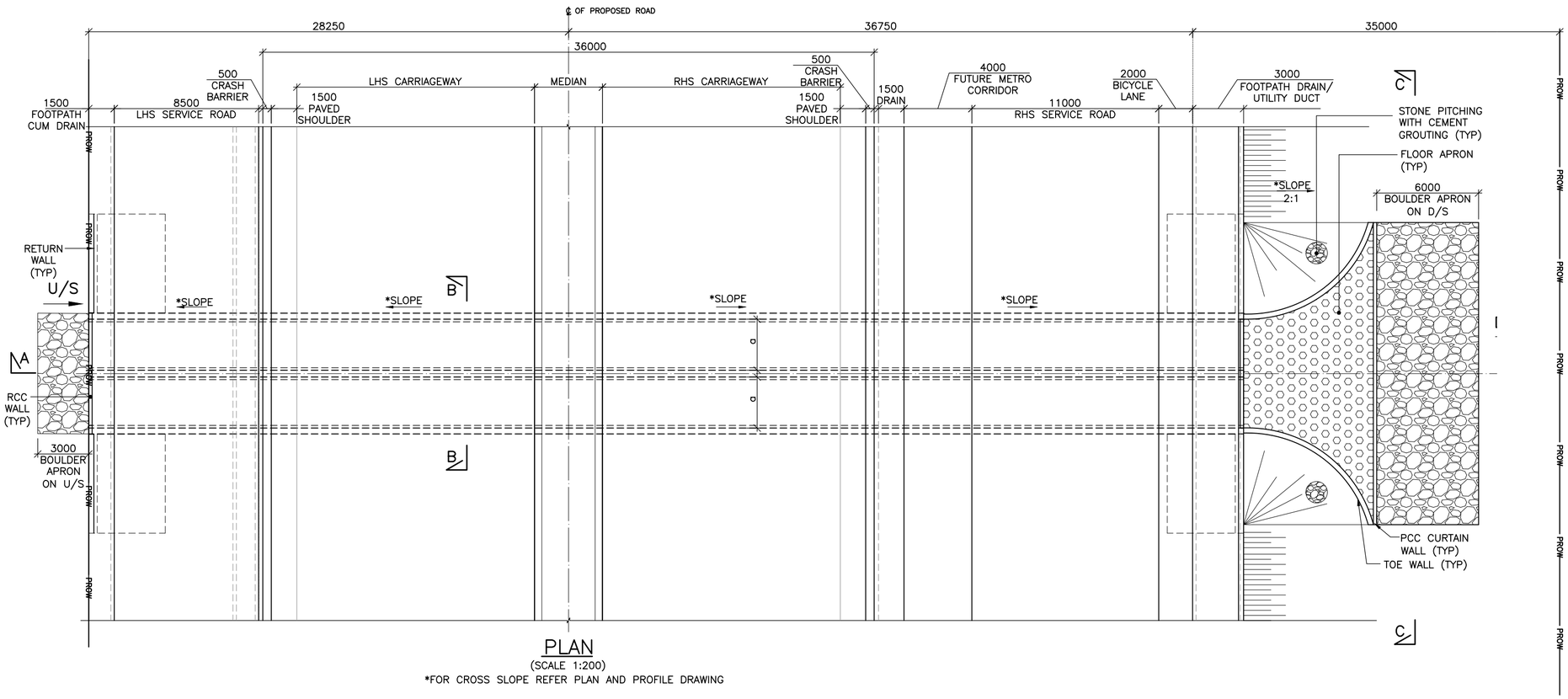

PLAN

(SCALE 1:200)

*FOR CROSS SLOPE REFER PLAN AND PROFILE DRAWING

REFERENCE DRAWINGS: (LATEST REVISION)

N0533/E/MAJ/DD–604 .... TYPICAL DOUBLE CELL BOX CULVERT VARIABLE FILLING GENERAL ARRANGEMENT DRAWING (SHEET 2 OF 2)

NOTES:

1. ALL DIMENSIONS ARE IN MILLIMETERS, LEVELS ARE IN METERS & CHAINAGES ARE IN KILOMETERS, UNLESS MENTIONED OTHERWISE.
2. DIMENSIONS ARE NOT TO BE SCALED OFF ONLY WRITTEN DIMENSIONS ARE TO BE FOLLOWED.
3. MATERIALS:
   a) CONCRETE – RCC = M25
      PCC = M15
   b) REINFORCING STEEL– Fe 500 CONFORMING TO IS:1786–2008.
4. BACKFILLING SHALL BE DONE SIMULTANEOUSLY ON BOTH APPROACHES IN EQUAL HEIGHTS.
5. NALLAH/DRAIN TO BE DIVERTED AS PER SITE CONDITION.
6. U/S & D/S TO BE VERIFIED AS PER SITE CONDITION.
7. POSITIVE SKEW ANGLE DENOTES CLOCKWISE ANGLE AND NEGATIVE SKEW ANGLE DENOTES ANTICLOCKWISE ANGLE.
8. DIMENSION OF STRUCTURAL MEMBERS SHOWN ARE INDICATIVE ONLY WHICH SHALL BE CONSIDERED BASED ON DETAILED DESIGN.
9. ABOVE DETAILS ARE OF TYPICAL NATURE TO INDICATE THE TYPE OF STRUCTURE AND SPACING OF STRUCTURAL MEMBER. ACTUAL CONSTRUCTION DESIGN MAY BE DIFFERENT BASED ON SITE CONDITIONS.
10. FOR CAMBER/SUPERELEVATION AND CROSS SECTION OF HIGHWAY AT SPECIFIC STRUCTURE LOCATIONS, RELEVANT TYPICAL CROSS SECTION DRAWING SHALL BE REFERRED.

LEGEND:

1) FRL – FINISHED ROAD LEVEL
2) TYP – TYPICAL
3) NGL – NATURAL GROUND LEVEL
4) LHS – LEFT HAND SIDE
5) U/S – UPSTREAM
6) D/S – DOWNSTREAM

THE DIMENSIONS SHOWN ARE FOR TENDER PURPOSE ONLY

DATE	No.	REVISION	DRAWN	PREPARED	CHECKED	APPROVED
02–03–26	R1	BOX CULVERT AT CH.TL. 1+590 ADDED	SSA	AGA	MD	MD
04–01–26	R0	FIRST SUBMISSION	SSA	AGA	MD	MD

☑ APPROVAL	☐ CONSTRUCTION	GIS			
☐ INFORMATION	☐ TENDER	HIGHWAYS		MAJOR STRUCTURES	
☐ DRAFT	☐ PRELIMNARY	ELECTRICAL		IRRIGATION/ WATER RESOURCES	
RELEASED FOR		BUILDINGS		PHE / PLUMBING/ FIREFIGHTING	
		ARCHITECTURE		MECHANICAL / HVAC	
		CHECKED BY / SIGN / DATE		CHECKED BY / SIGN / DATE	

FOR INTERNAL OFFICE ONLY

CONSULTANT
STUP Consultants Pvt. Ltd.
REGISTERED OFFICE : Unit No.2702, 27th Floor, Rupa Renaissance, P.No.J3–33 & D–207, Juinagar, MIDC TTC Industrial Area, Turbhe, Navi Mumbai, Thane, Maharashtra–400705 Tel: +91 (022) 68067777, E–mail: mumbai@asystem.com
OFFICE OF ORIGIN : #69, JP & Devi Jambulesthwar Arcade 4th Floor, Millers Road Bengaluru – 560 052 Tel.: 080 – 40 39 79 79 Email : bangalore@asystem.com

OWNER	BANGALORE DEVELOPMENT AUTHORITY
DATE	04–01–2026
CONTRACTOR	
DRAWN	SSA
PROJECT	CONSTRUCTION OF EIGHT LANE BENGALURU BUSINESS CORRIDOR (BBC)
PREPARED	AGA
CHECKED	MD
TITLE	TYPICAL DOUBLE CELL BOX CULVERT VARIABLE FILLING GENERAL ARRANGEMENT DRAWING (SHEET 1 OF 2)
APPROVED	MD
DRG.NO.:	N0533/E/MAJ/DD–603 (R1)
SCALE:	AS SHOWN

DISCLAIMER: ONLY APPROVED AND SIGNED HARD COPIES SHALL BE USED FOR CONSTRUCTION

THIS DRAWING IS THE PROPERTY OF STUP CONSULTANTS Pvt. LTD. IT SHOULD NOT BE USED, COPIED, OR REPRODUCED WITHOUT THEIR WRITTEN PERMISSION.

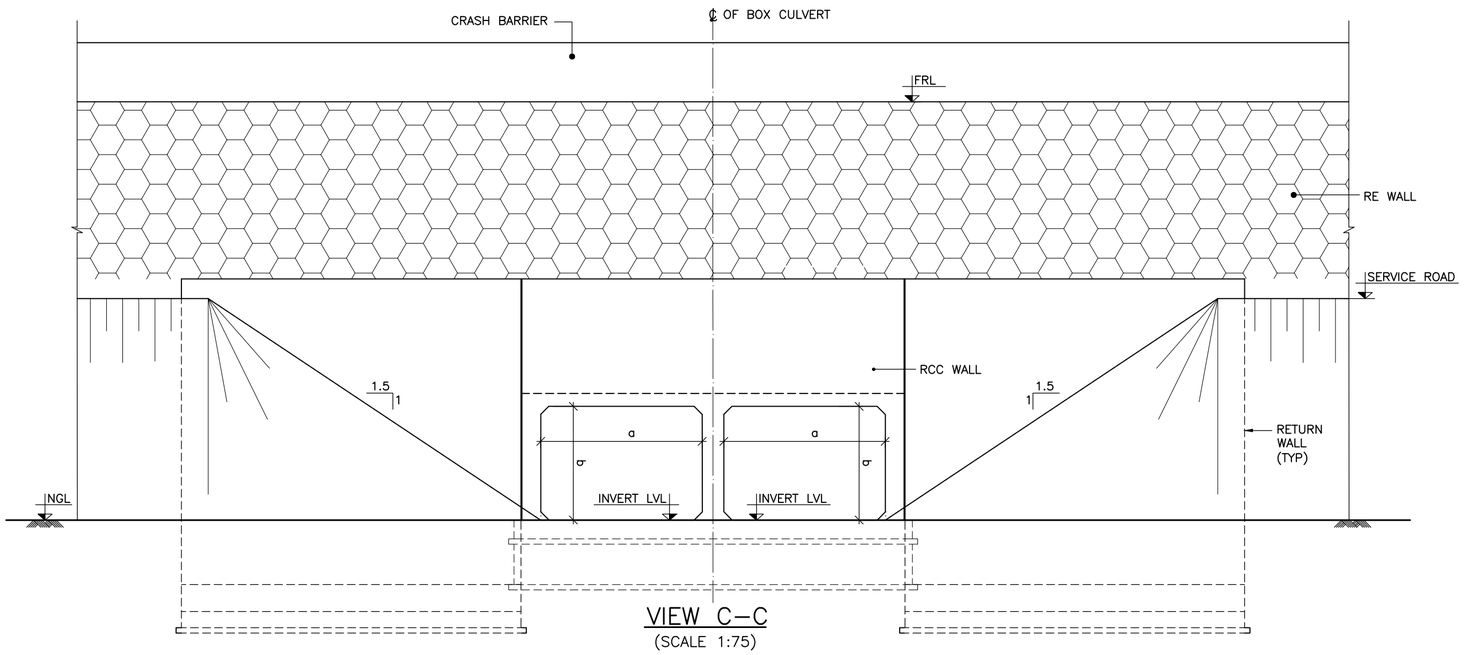

VIEW C–C
(SCALE 1:75)

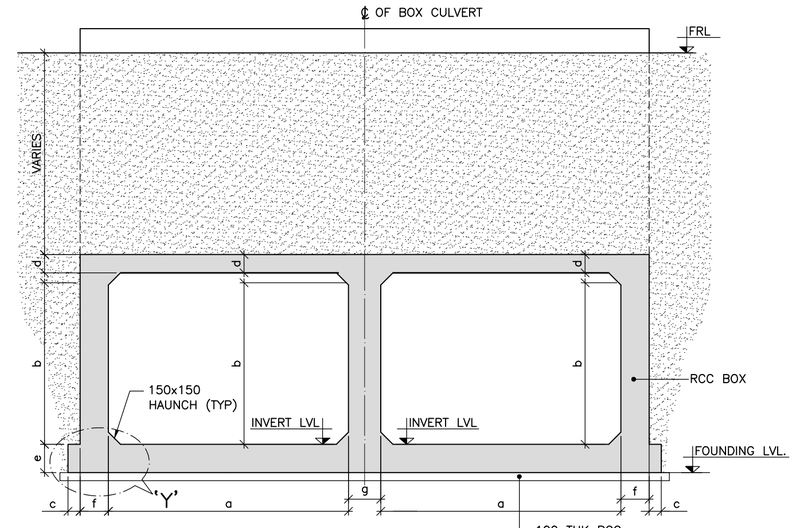

SECTION B–B
(SCALE 1:50)

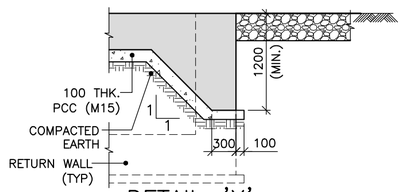

DETAIL–'X'
DETAILS OF SHEAR KEY
(SCALE 1:50)

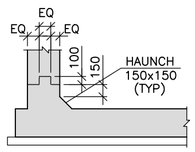

DETAIL–'Y'
(SCALE 1:50)

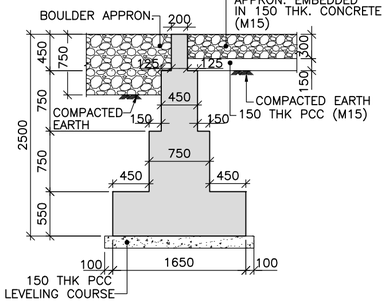

TYPICAL CROSS SECTION OF CURTAIN WALL
(DOWN STREAM SIDE)
(SCALE 1:50)

SR. NO.	CD. NO.	PROPOSED CHAINAGE (km)	SPAN ARRANGEMENT (m) (SQUARE DIMENSION)	PROPOSED FRL AT MEDIAN EDGE (m)	PROPOSED INVERT LEVEL (m)	EMBANKMENT FILL (m) (h)	SKEW ANGLE (DEGREE)	PROPOSED FORMATION WIDTH (m)			DIMENSIONS OF PROPOSED BOX (m) (SQUARE DIMENSIONS)						
									MAIN CARRIAGEWAY								
								MEDIAN	LHS	RHS	a	b	c	d	e	f	g
1	T2/1	TL. 1+590	2x2x2	850.069	847.127	0.642	0	4	14	14	2	2	0.150	0.300	0.300	0.300	0.250

THE DIMENSIONS SHOWN ARE FOR TENDER PURPOSE ONLY

NOTES:
1. FOR NOTES REFER DRAWING NO. N0533/E/MAJ/DD–603 (SHEET 1 OF 2)

REFERENCE DRAWINGS: (LATEST REVISION)
N0533/E/MAJ/DD–603 .... TYPICAL DOUBLE CELL BOX CULVERT VARIABLE FILLING GENERAL ARRANGEMENT DRAWING (SHEET 1 OF 2)

DATE	No.	REVISION	DRAWN	PREPARED	CHECKED	APPROVED
02–03–26	R1	BOX CULVERT AT CH.TL. 1+590 ADDED	SSA	AGA	MD	MD
04–01–26	R0	FIRST SUBMISSION	SSA	AGA	MD	MD

☑ APPROVAL ☐ CONSTRUCTION
☐ INFORMATION ☐ TENDER
☐ DRAFT ☐ PRELIMNARY

RELEASED FOR

GIS					
HIGHWAYS			MAJOR STRUCTURES		
ELECTRICAL			IRRIGATION/ WATER RESOURCES		
BUILDINGS			PHE / PLUMBING/ FIREFIGHTING		
ARCHITECTURE			MECHANICAL / HVAC		
CHECKED BY	SIGN	DATE	CHECKED BY	SIGN	DATE

FOR INTERNAL OFFICE ONLY

CONSULTANT
STUP Consultants Pvt. Ltd.
REGISTERED OFFICE : Unit No.2702, 27th Floor, Rupa Renaissance, P.No.J3–33 & D–207, Juinagar, MIDC TTC Industrial Area, Turbhe, Navi Mumbai, Thane, Maharashtra–400705 Tel: +91 (022) 68067777, E–mail: mumbai@asssystem.com
OFFICE OF ORIGIN : #69, 3rd & Devi Jambulekshmi Arcade 4th Floor, Millers Road Bengaluru – 560 052 Tel.: 080 – 40 39 79 79 Email : bangalore@asssystem.com

OWNER: BANGALORE DEVELOPMENT AUTHORITY
CONTRACTOR:
PROJECT: CONSTRUCTION OF EIGHT LANE BENGALURU BUSINESS CORRIDOR (BBC)
TITLE: TYPICAL DOUBLE CELL BOX CULVERT VARIABLE FILLING GENERAL ARRANGEMENT DRAWING (SHEET 2 OF 2)
DRG.NO.: N0533/E/MAJ/DD–604 (R1)

DATE: 04–01–2026
DRAWN: SSA
PREPARED: AGA
CHECKED: MD
APPROVED: MD
SCALE: AS SHOWN

DISCLAIMER: ONLY APPROVED AND SIGNED HARD COPIES SHALL BE USED FOR CONSTRUCTION

THIS DRAWING IS THE PROPERTY OF STUP CONSULTANTS Pvt. LTD. IT SHOULD NOT BE USED, COPIED, OR REPRODUCED WITHOUT THEIR WRITTEN PERMISSION.

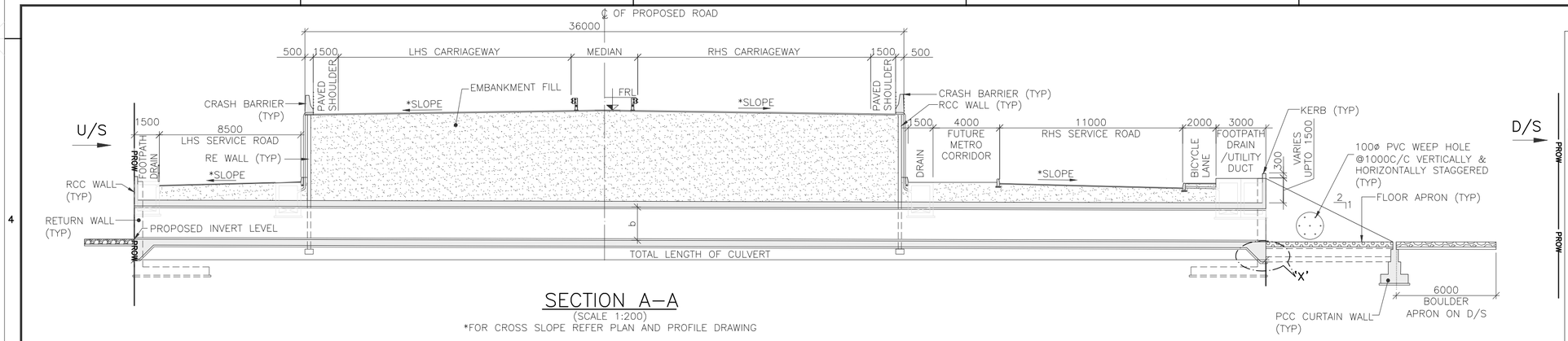

SECTION A–A

(SCALE 1:200)

*FOR CROSS SLOPE REFER PLAN AND PROFILE DRAWING

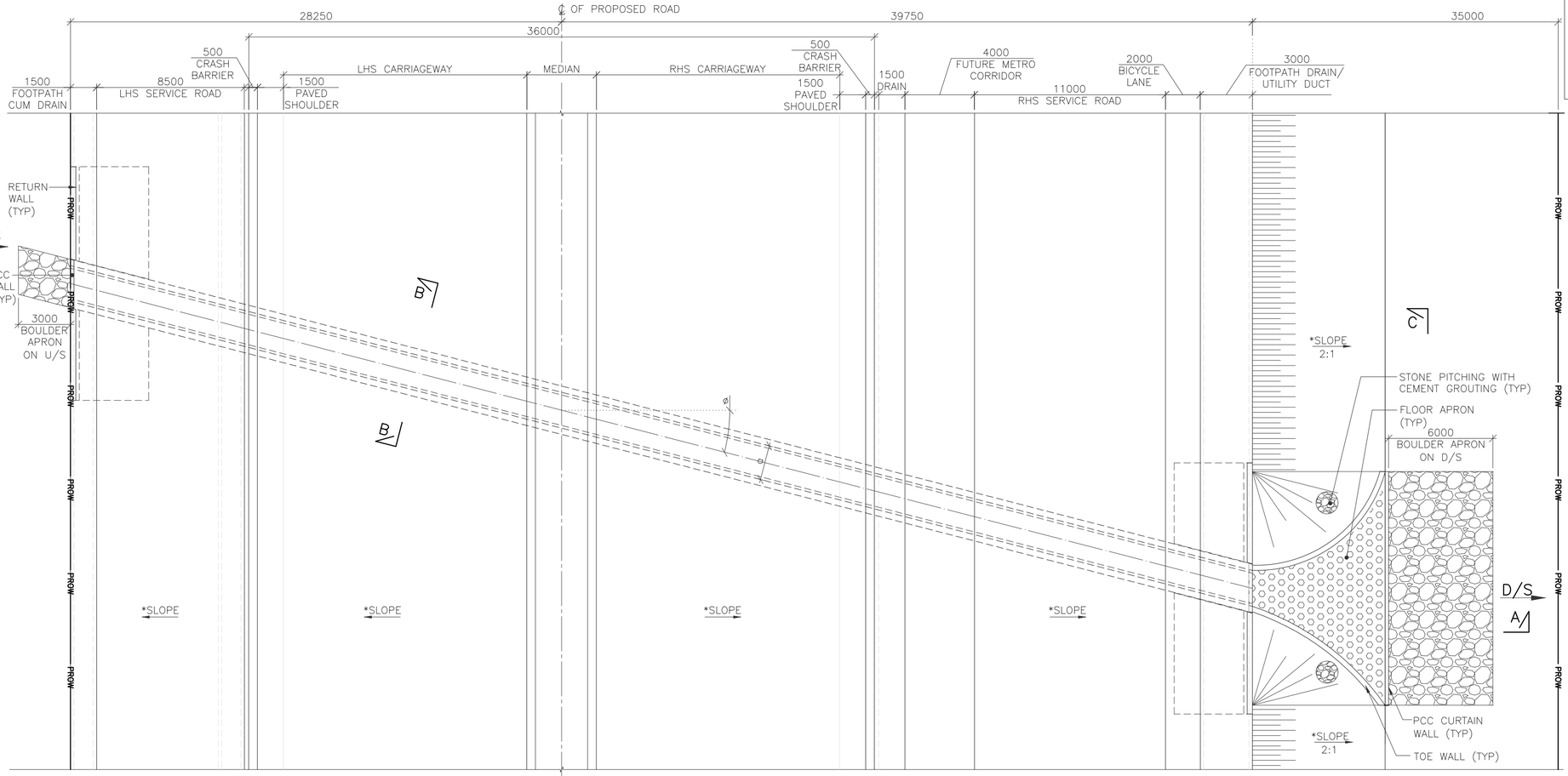

PLAN

(SCALE 1:200)

*FOR CROSS SLOPE REFER PLAN AND PROFILE DRAWING

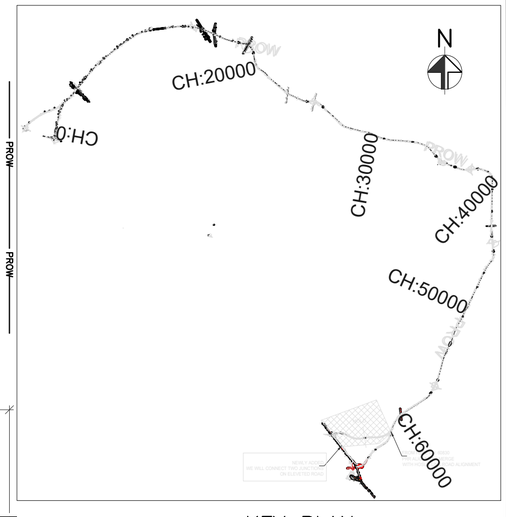

KEY PLAN

(SCALE : 1:1500)

NOTES:

1. ALL DIMENSIONS ARE IN MILLIMETERS, LEVELS ARE IN METERS & CHAINAGES ARE IN KILOMETERS, UNLESS MENTIONED OTHERWISE.
2. DIMENSIONS ARE NOT TO BE SCALED OFF ONLY WRITTEN DIMENSIONS ARE TO BE FOLLOWED.
3. MATERIALS:
   a) CONCRETE – RCC = M25
      PCC = M15
   b) REINFORCING STEEL– Fe 500 CONFORMING TO IS:1786–2008.
4. BACKFILLING SHALL BE DONE SIMULTANEOUSLY ON BOTH APPROACHES IN EQUAL HEIGHTS.
5. NALLAH/DRAIN TO BE DIVERTED AS PER SITE CONDITION.
6. U/S & D/S TO BE VERIFIED AS PER SITE CONDITION.
7. POSITIVE SKEW ANGLE DENOTES CLOCKWISE ANGLE AND NEGATIVE SKEW ANGLE DENOTES ANTICLOCKWISE ANGLE.
8. DIMENSION OF STRUCTURAL MEMBERS SHOWN ARE INDICATIVE ONLY WHICH SHALL BE CONSIDERED BASED ON DETAILED DESIGN.
9. ABOVE DETAILS ARE OF TYPICAL NATURE TO INDICATE THE TYPE OF STRUCTURE AND SPACING OF STRUCTURAL MEMBER. ACTUAL CONSTRUCTION DESIGN MAY BE DIFFERENT BASED ON SITE CONDITIONS.
10. FOR CAMBER/SUPERELEVATION AND CROSS SECTION OF HIGHWAY AT SPECIFIC STRUCTURE LOCATIONS, RELEVANT TYPICAL CROSS SECTION DRAWING SHALL BE REFERRED.

LEGEND:

1) FRL – FINISHED ROAD LEVEL
2) TYP – TYPICAL
3) NGL – NATURAL GROUND LEVEL
4) LHS – LEFT HAND SIDE
5) U/S – UPSTREAM
6) D/S – DOWNSTREAM

REFERENCE DRAWINGS: (LATEST REVISION)

N0533/E/MAJ/DD–606.... TYPICAL SINGLE CELL BOX CULVERT VARIABLE FILLING (SKEW) GENERAL ARRANGEMENT DRAWING (SHEET 2 OF 2)

THE DIMENSIONS SHOWN ARE FOR TENDER PURPOSE ONLY

DATE	No.	REVISION	DRAWN	PREPARED	CHECKED	APPROVED
31/12/2025	R0	FIRST SUBMISSION	SSA	AGA	MD	MD

☑ APPROVAL	☐ CONSTRUCTION		
☐ INFORMATION	☐ TENDER		
☐ DRAFT	☐ PRELIMNARY		

RELEASED FOR

GIS					
HIGHWAYS			MAJOR STRUCTURES		
ELECTRICAL			IRRIGATION/ WATER RESOURCES		
BUILDINGS			PHE / PLUMBING/ FIREFIGHTING		
ARCHITECTURE			MECHANICAL / HVAC		
CHECKED BY	SIGN	DATE	CHECKED BY	SIGN	DATE

FOR INTERNAL OFFICE ONLY

CONSULTANT
STUP Consultants Pvt. Ltd.
REGISTERED OFFICE : Unit No.2702, 27th Floor, Rupa Renaissance, P.No.D–33 & D–207, Juinagar, MIDC TTC Industrial Area, Turbhe, Navi Mumbai, Thane, Maharashtra–400705 Tel: +91 (022) 69067777, E–mail: mumbai@assystem.com
OFFICE OF ORIGIN : #69, JP & Devi Jambukeshwar Arcade 4th Floor, Millers Road Bengaluru – 560 052 Tel.: 080 – 40 39 79 79 Email : bangalore@assystem.com

OWNER: BANGALORE DEVELOPMENT AUTHORITY

CONTRACTOR

PROJECT: CONSTRUCTION OF EIGHT LANE BENGALURU BUSINESS CORRIDOR (BBC)

TITLE: TYPICAL SINGLE CELL BOX CULVERT VARIABLE FILLING (SKEW) GENERAL ARRANGEMENT DRAWING (SHEET 1 OF 2)

DRG.NO.: N0533/E/MAJ/DD–605 (R0)

DATE: 31–12–2025

DRAWN: SSA

PREPARED: AGA

CHECKED: MD

APPROVED: MD

SCALE: AS SHOWN

DISCLAIMER: ONLY APPROVED AND SIGNED HARD COPIES SHALL BE USED FOR CONSTRUCTION

THIS DRAWING IS THE PROPERTY OF STUP CONSULTANTS Pvt. LTD. IT SHOULD NOT BE USED, COPIED, OR REPRODUCED WITHOUT THEIR WRITTEN PERMISSION.

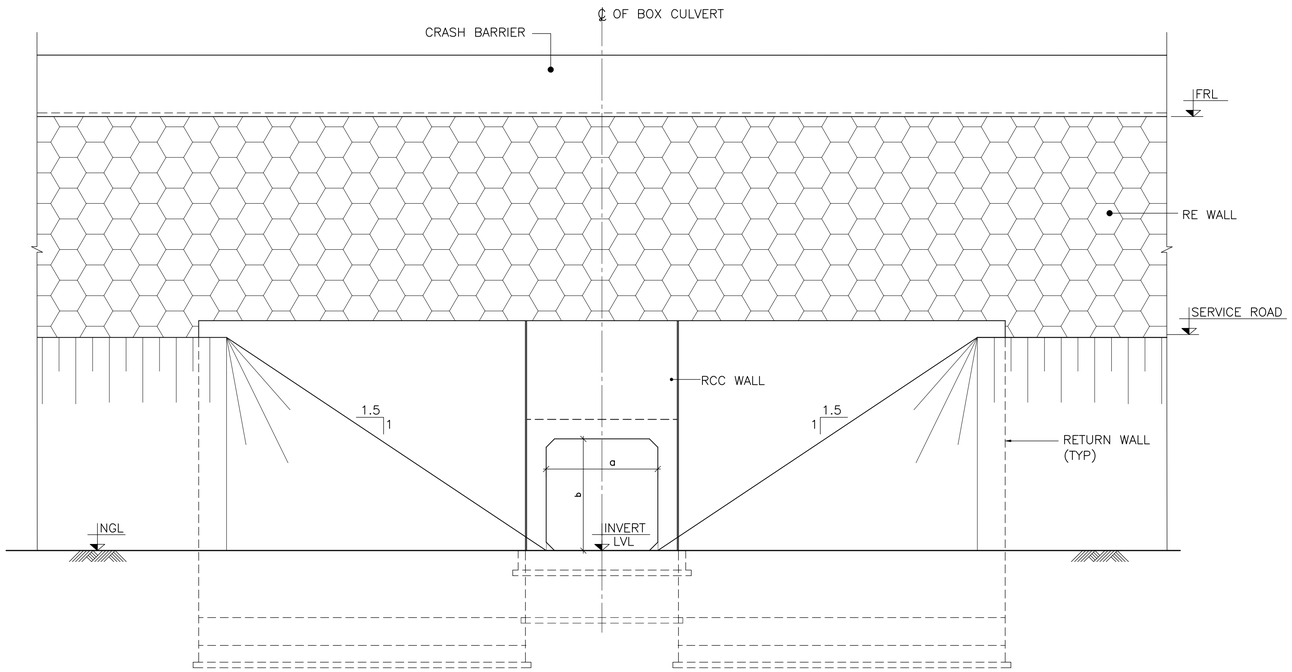

VIEW C–C
(SCALE 1:75)
(FOR WING WALL DIMENSIONS REFER SEPARATE DRAWING)

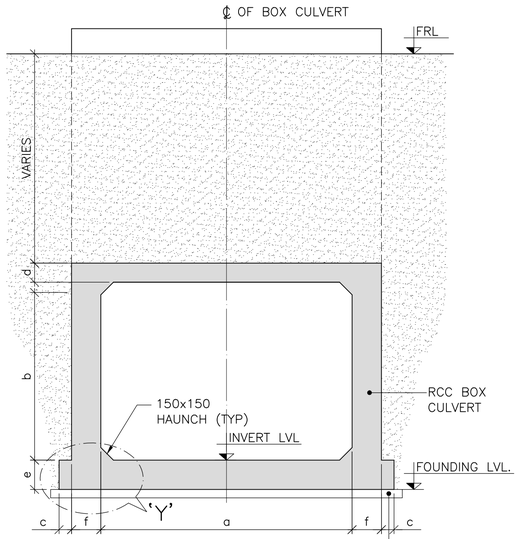

SECTION B–B
(SCALE 1:50)

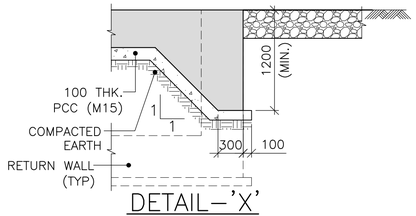

DETAIL–'X'
DETAILS OF SHEAR KEY
(SCALE 1:50)

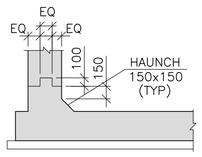

DETAIL–'Y'
(SCALE 1:50)

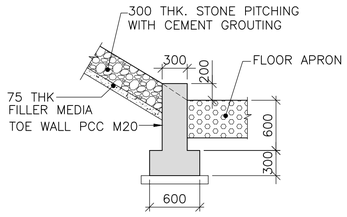

DETAILS OF TOE WALL
(SCALE 1:50)

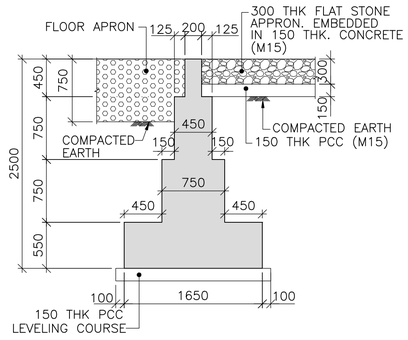

TYPICAL CROSS SECTION OF CURTAIN WALL (DOWN STREAM SIDE)
(SCALE 1:50)

SR NO.	CD. NO.	PROPOSED CHAINAGE (km)	SPAN ARRANGEMENT (m) (SQUARE DIMENSION)	PROPOSED FRL AT MEDIAN EDGE (m)	PROPOSED INVERT LEVEL (m)	EMBANKMENT FILL (m)	SKEW ANGLE (DEGREE) (ø)	PROPOSED FORMATION WIDTH (m)			DIMENSION OF PROPOSED BOX (m) (SQUARE DIMENSIONS)					
									MAIN CARRIAGEWAY							
								MEDIAN	LHS	RHS	a	b	c	d	e	f
1	3/1	2+266	1x2x2	867.774	860.270	4.980	26.264	4	14	14	2	2	0.150	0.300	0.300	0.300
2	9/1	8+724	1x2x2	889.998	882.782	4.700	47.540	4	14	14	2	2	0.150	0.350	0.350	0.350
3	10/1	9+151	1x2x2	887.772	877.398	7.874	−23.650	4	14	14	2	2	0.150	0.500	0.500	0.500
4	10/2	9+386	1x3x2	885.689	882.522	0.867	−34.425	4	14	14	3	2	0.150	0.300	0.300	0.300
5	11/1	10+234	1x2x2	888.489	884.822	0.950	−45.000	4	14	14	2	2	0.150	0.500	0.500	0.500

THE DIMENSIONS SHOWN ARE FOR TENDER PURPOSE ONLY

NOTES:
1. FOR NOTES REFER DRAWING NO. N0533/E/MAJ/DD–605 (SHEET 1 OF 2)

REFERENCE DRAWINGS: (LATEST REVISION)
N0533/E/MAJ/DD–605.... TYPICAL SINGLE CELL BOX CULVERT VARIABLE FILLING (SKEW) GENERAL ARRANGEMENT DRAWING (SHEET 1 OF 2)

DATE	No.	REVISION	DRAWN	PREPARED	CHECKED	APPROVED
31/12/2025	R0	FIRST SUBMISSION	SSA	AGA	MD	MD

☑ APPROVAL	☐ CONSTRUCTION					
☐ INFORMATION	☐ TENDER					
☐ DRAFT	☐ PRELIMNARY					
RELEASED FOR						
GIS						
HIGHWAYS			MAJOR STRUCTURES			
ELECTRICAL			IRRIGATION/ WATER RESOURCES			
BUILDINGS			PHE / PLUMBING/ FIREFIGHTING			
ARCHITECTURE			MECHANICAL / HVAC			
CHECKED BY	SIGN	DATE	CHECKED BY	SIGN	DATE	
FOR INTERNAL OFFICE ONLY						

CONSULTANT
STUP Consultants Pvt. Ltd.
REGISTERED OFFICE : Unit No.2702, 27th Floor, Rupa Renaissance, P.No.D–33 & D–207, Junagar, MIDC TTC Industrial Area, Turbhe, Navi Mumbai, Thane, Maharashtra–400705. Tel: +91 (022) 68067777, E–mail: mumbai@assystem.com
OFFICE OF ORIGIN : #69, JF & Dev Jambulesthwar Arcade 4th Floor, Millers Road Bengaluru – 560 052 Tel.: 080 – 40 39 79 79 Email : bangalore@assystem.com

OWNER: BANGALORE DEVELOPMENT AUTHORITY
DATE: 31–12–2025
CONTRACTOR
DRAWN: SSA
PROJECT: CONSTRUCTION OF EIGHT LANE BENGALURU BUSINESS CORRIDOR (BBC)
PREPARED: AGA
CHECKED: MD
TITLE: TYPICAL SINGLE CELL BOX CULVERT VARIABLE FILLING (SKEW) GENERAL ARRANGEMENT DRAWING (SHEET 2 OF 2)
APPROVED: MD
DRG.NO.: N0533/E/MAJ/DD–606 (R0)
SCALE: AS SHOWN

A2

THIS DRAWING IS THE PROPERTY OF STUP CONSULTANTS Pvt. LTD. IT SHOULD NOT BE USED, COPIED, OR REPRODUCED WITHOUT THEIR WRITTEN PERMISSION.

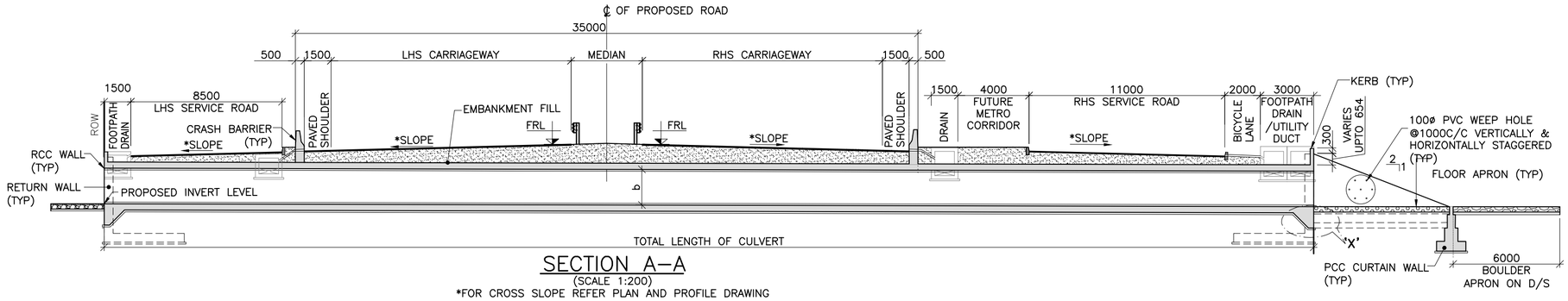

SECTION A–A

(SCALE 1:200)

*FOR CROSS SLOPE REFER PLAN AND PROFILE DRAWING

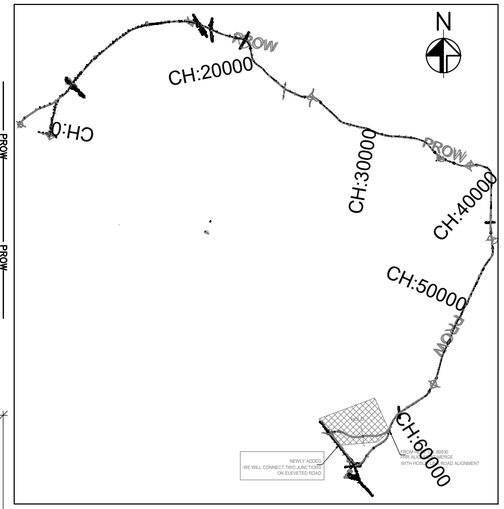

KEY PLAN

(SCALE : 1:1500)

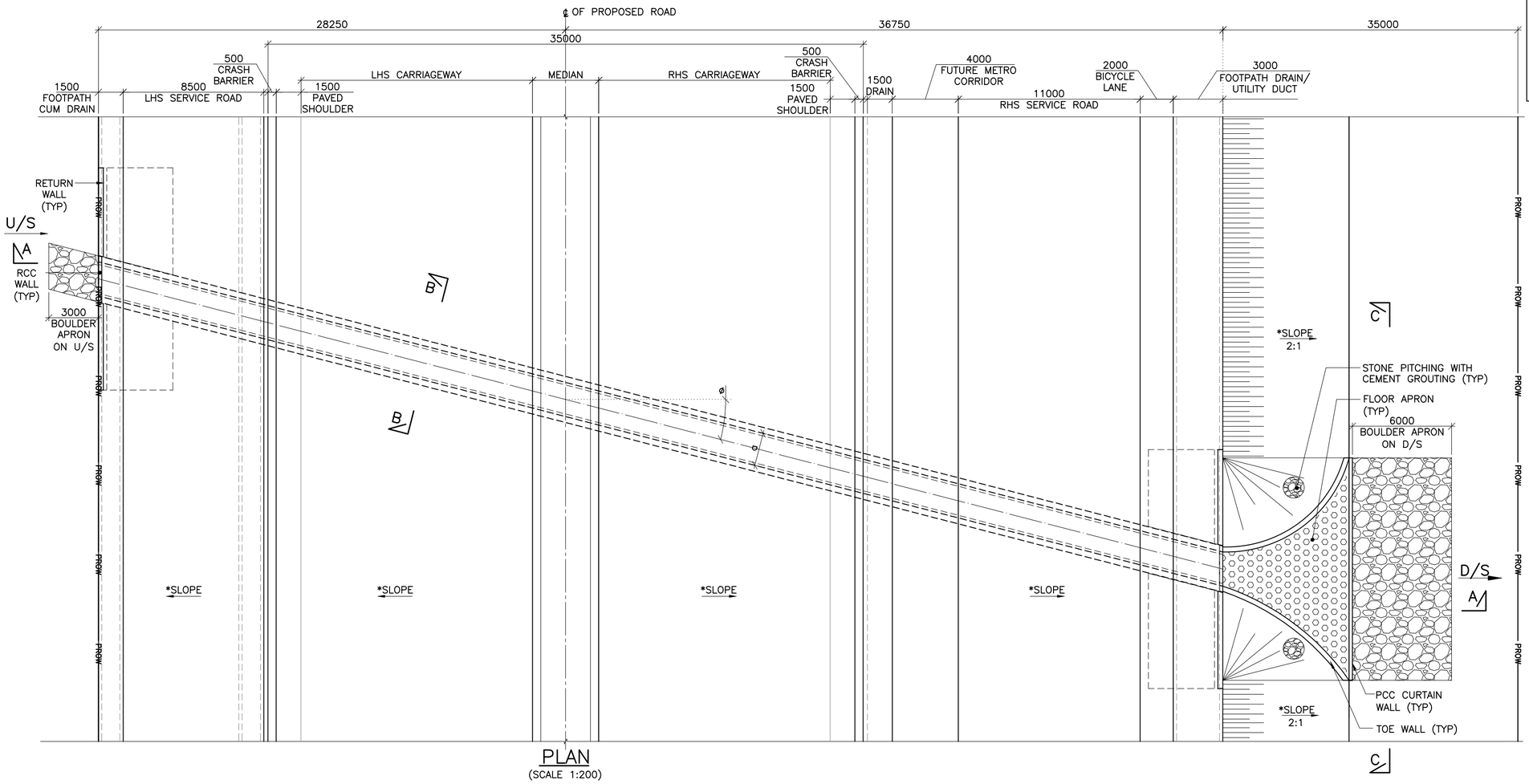

PLAN

(SCALE 1:200)

*FOR CROSS SLOPE REFER PLAN AND PROFILE DRAWING

NOTES:

1. ALL DIMENSIONS ARE IN MILLIMETERS, LEVELS ARE IN METERS & CHAINAGES ARE IN KILOMETERS, UNLESS MENTIONED OTHERWISE.
2. DIMENSIONS ARE NOT TO BE SCALED OFF ONLY WRITTEN DIMENSIONS ARE TO BE FOLLOWED.
3. MATERIALS:
   a) CONCRETE – RCC = M25
      PCC = M15
   b) REINFORCING STEEL– Fe 500 CONFORMING TO IS:1786–2008.
4. BACKFILLING SHALL BE DONE SIMULTANEOUSLY ON BOTH APPROACHES IN EQUAL HEIGHTS.
5. NALLAH/DRAIN TO BE DIVERTED AS PER SITE CONDITION.
6. U/S & D/S TO BE VERIFIED AS PER SITE CONDITION.
7. POSITIVE SKEW ANGLE DENOTES CLOCKWISE ANGLE AND NEGATIVE SKEW ANGLE DENOTES ANTICLOCKWISE ANGLE.
8. DIMENSION OF STRUCTURAL MEMBERS SHOWN ARE INDICATIVE ONLY WHICH SHALL BE CONSIDERED BASED ON DETAILED DESIGN.
9. ABOVE DETAILS ARE OF TYPICAL NATURE TO INDICATE THE TYPE OF STRUCTURE AND SPACING OF STRUCTURAL MEMBER. ACTUAL CONSTRUCTION DESIGN MAY BE DIFFERENT BASED ON SITE CONDITIONS.
10. FOR CAMBER/SUPERELEVATION AND CROSS SECTION OF HIGHWAY AT SPECIFIC STRUCTURE LOCATIONS, RELEVANT TYPICAL CROSS SECTION DRAWING SHALL BE REFERRED.

LEGEND:

1) FRL – FINISHED ROAD LEVEL
2) TYP – TYPICAL
3) NGL – NATURAL GROUND LEVEL
4) LHS – LEFT HAND SIDE
5) U/S – UPSTREAM
6) D/S – DOWNSTREAM

REFERENCE DRAWINGS:

N0533/E/MAJ/DD–608 .... TYPICAL SINGLE CELL BOX CULVERT VARIABLE FILLING (SKEW) GENERAL ARRANGEMENT DRAWING (SHEET 2 OF 2)

THE DIMENSIONS SHOWN ARE FOR TENDER PURPOSE ONLY

DATE	No.	REVISION	DRAWN	PREPARED	CHECKED	APPROVED
04–01–26	R0	FIRST SUBMISSION	SSA	AGA	MD	MD

FOR INTERNAL OFFICE ONLY

☑ APPROVAL			☐ CONSTRUCTION			
☐ INFORMATION			☐ TENDER			
☐ DRAFT			☐ PRELIMNARY			
RELEASED FOR						
GIS						
HIGHWAYS			MAJOR STRUCTURES			
ELECTRICAL			IRRIGATION/ WATER RESOURCES			
BUILDINGS			PHE / PLUMBING/ FIREFIGHTING			
ARCHITECTURE			MECHANICAL / HVAC			
CHECKED BY	SIGN	DATE	CHECKED BY	SIGN	DATE	

CONSULTANT
STUP Consultants Pvt. Ltd.
REGISTERED OFFICE : Unit No.2702, 27th Floor, Rupa Renaissance, P.No.D–33 & D–207, Juinagar, MIDC TTC Industrial Area, Turbhe, Navi Mumbai, Thane, Maharashtra–400705. Tel: +91 (022) 68067777, E–mail: mumbai@stusystem.com
OFFICE OF ORIGIN : #69, JP & Devi Jambukeshwar Arcade 4th Floor, Millers Road Bengaluru – 560 052 Tel.: 080 – 40 39 79 79 Email : bangalore@stusystem.com

OWNER: BANGALORE DEVELOPMENT AUTHORITY

CONTRACTOR

PROJECT: CONSTRUCTION OF EIGHT LANE BENGALURU BUSINESS CORRIDOR (BBC)

TITLE: TYPICAL SINGLE CELL BOX CULVERT UPTO 2.5M FILLING (SKEW) GENERAL ARRANGEMENT DRAWING (SHEET 1 OF 2)

DRG.NO.: N0533/E/MAJ/DD–607 (R0)

DATE	04–01–2026
DRAWN	SSA
PREPARED	AGA
CHECKED	MD
APPROVED	MD
SCALE:	AS SHOWN

DISCLAIMER: ONLY APPROVED AND SIGNED HARD COPIES SHALL BE USED FOR CONSTRUCTION

THIS DRAWING IS THE PROPERTY OF STUP CONSULTANTS Pvt. LTD. IT SHOULD NOT BE USED, COPIED, OR REPRODUCED WITHOUT THEIR WRITTEN PERMISSION.

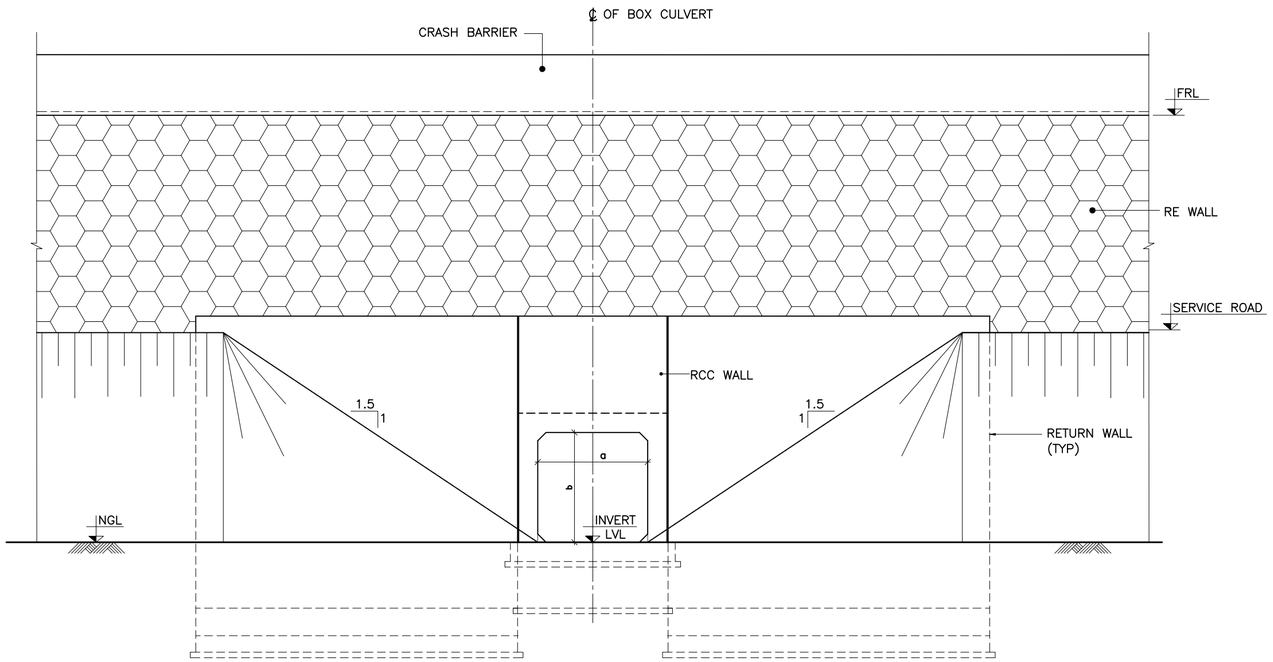

VIEW C–C
(SCALE 1:75)
(FOR WING WALL DIMENSIONS REFER SEPARATE DRAWING)

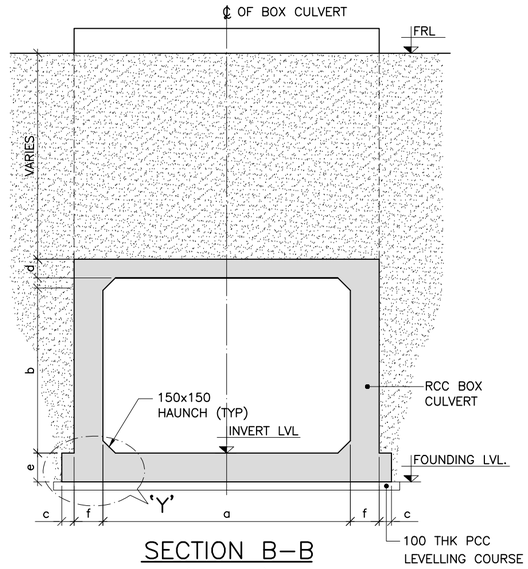

SECTION B–B
(SCALE 1:50)

DETAIL–'X'
DETAILS OF SHEAR KEY
(SCALE 1:50)

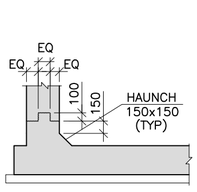

DETAIL–'Y'
(SCALE 1:50)

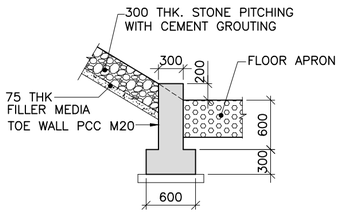

DETAILS OF TOE WALL
(SCALE 1:50)

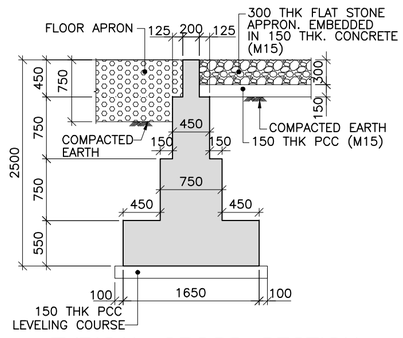

TYPICAL CROSS SECTION OF CURTAIN WALL
(DOWN STREAM SIDE)
(SCALE 1:50)

SR NO.	CD. NO.	PROPOSED CHAINAGE (km)	SPAN ARRANGEMENT (m) (SQUARE DIMENSION)	PROPOSED FRL AT MEDIAN EDGE (m)	PROPOSED INVERT LEVEL (m)	EMBANKMENT FILL (m)	SKEW ANGLE (DEGREE) (ø)	PROPOSED FORMATION WIDTH (m)			DIMENSION OF PROPOSED BOX (m) (SQUARE DIMENSIONS)					
								MEDIAN	MAIN CARRIAGEWAY							
									LHS	RHS	a	b	c	d	e	f
1	8/1	7+412	1x2x2	880.097	876.352	1.230	–30.737	4	14	14	2	2	0.150	0.300	0.300	0.300

THE DIMENSIONS SHOWN ARE FOR TENDER PURPOSE ONLY

NOTES:
1. FOR NOTES REFER DRAWING NO. N0533/E/MAJ/DD–607 (SHEET 1 OF 2)

REFERENCE DRAWINGS: (LATEST REVISION)
N0533/E/MAJ/DD–607 .... TYPICAL SINGLE CELL BOX CULVERT
VARIABLE FILLING (SKEW)
GENERAL ARRANGEMENT DRAWING
(SHEET 1 OF 2)

DATE	No.	REVISION	DRAWN	PREPARED	CHECKED	APPROVED
04–01–26	R0	FIRST SUBMISSION	SSA	AGA	MD	MD

☑ APPROVAL ☐ CONSTRUCTION
☐ INFORMATION ☐ TENDER
☐ DRAFT ☐ PRELIMNARY

RELEASED FOR

GIS					
HIGHWAYS			MAJOR STRUCTURES		
ELECTRICAL			IRRIGATION/ WATER RESOURCES		
BUILDINGS			PHE / PLUMBING/ FIREFIGHTING		
ARCHITECTURE			MECHANICAL / HVAC		
CHECKED BY	SIGN	DATE	CHECKED BY	SIGN	DATE

FOR INTERNAL OFFICE ONLY

CONSULTANT
STUP Consultants Pvt. Ltd.
REGISTERED OFFICE : Unit No.2702, 27th Floor, Rupa Renaissance, P.No.D-33 & D-207, Juinagar, MIDC TTC Industrial Area, Turbhe, Navi Mumbai, Thane, Maharashtra–400705 Tel: +91 (022) 68057777, E-mail: mumbai@assystem.com
OFFICE OF ORIGIN : 8th, 9th & Devi Jambukeshwar Arcade 4th Floor, Millers Road Bengaluru – 560 052 Tel.: 080 – 40 39 79 79 Email : bangalore@assystem.com

OWNER: BANGALORE DEVELOPMENT AUTHORITY

CONTRACTOR

PROJECT: CONSTRUCTION OF EIGHT LANE BENGALURU BUSINESS CORRIDOR (BBC)

TITLE: TYPICAL SINGLE CELL BOX CULVERT UPTO 2.5M FILLING (SKEW) GENERAL ARRANGEMENT DRAWING (SHEET 2 OF 2)

DRG.NO.: N0533/E/MAJ/DD–608 (R0)

DATE: 04–01–2026
DRAWN: SSA
PREPARED: AGA
CHECKED: MD
APPROVED: MD
SCALE: AS SHOWN

DISCLAIMER: ONLY APPROVED AND SIGNED HARD COPIES SHALL BE USED FOR CONSTRUCTION

THIS DRAWING IS THE PROPERTY OF STUP CONSULTANTS Pvt. LTD. IT SHOULD NOT BE USED, COPIED, OR REPRODUCED WITHOUT THEIR WRITTEN PERMISSION.

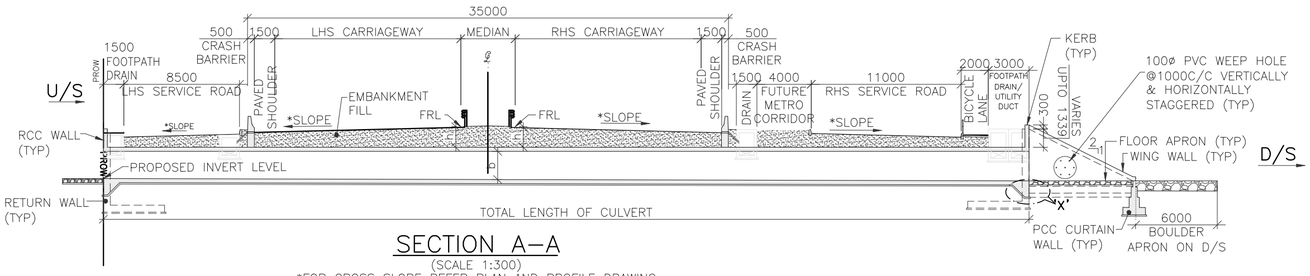

SECTION A–A

(SCALE 1:300)

*FOR CROSS SLOPE REFER PLAN AND PROFILE DRAWING

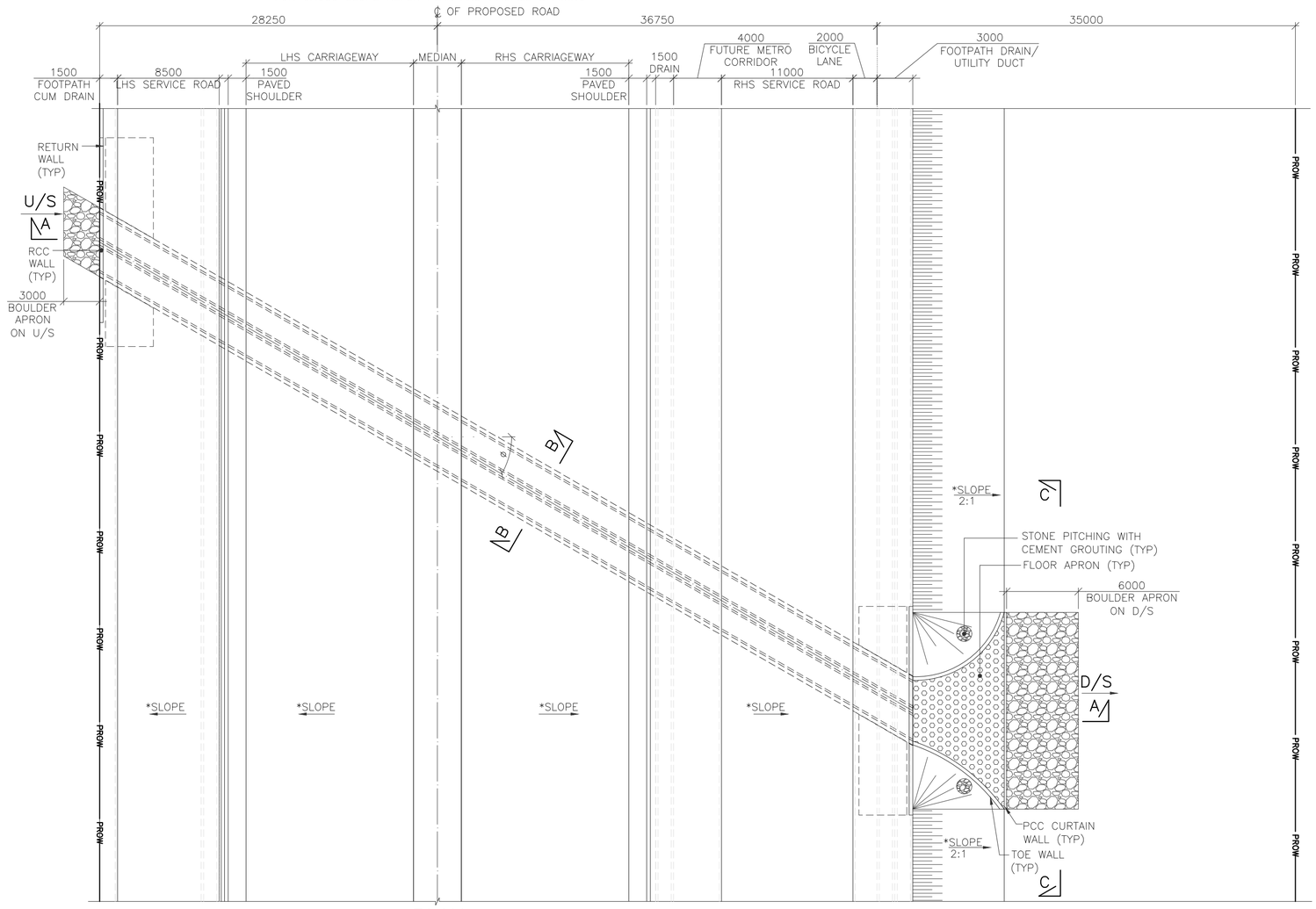

PLAN

(SCALE 1:300)

*FOR CROSS SLOPE REFER PLAN AND PROFILE DRAWING

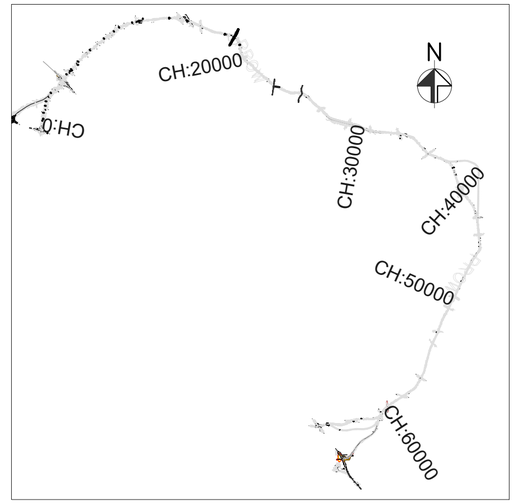

KEY PLAN

(SCALE : 1:1500)

NOTES:

1. ALL DIMENSIONS ARE IN MILLIMETERS, LEVELS ARE IN METERS & CHAINAGES ARE IN KILOMETERS, UNLESS MENTIONED OTHERWISE.
2. DIMENSIONS ARE NOT TO BE SCALED OFF ONLY WRITTEN DIMENSIONS ARE TO BE FOLLOWED.
3. MATERIALS:
   a) CONCRETE – RCC = M25
      PCC = M15
   b) REINFORCING STEEL– Fe 500 CONFORMING TO IS:1786–2008.
4. BACKFILLING SHALL BE DONE SIMULTANEOUSLY ON BOTH APPROACHES IN EQUAL HEIGHTS.
5. NALLAH/DRAIN TO BE DIVERTED AS PER SITE CONDITION.
6. U/S & D/S TO BE VERIFIED AS PER SITE CONDITION.
7. POSITIVE SKEW ANGLE DENOTES CLOCKWISE ANGLE AND NEGATIVE SKEW ANGLE DENOTES ANTICLOCKWISE ANGLE.
8. DIMENSION OF STRUCTURAL MEMBERS SHOWN ARE INDICATIVE ONLY WHICH SHALL BE CONSIDERED BASED ON DETAILED DESIGN.
9. ABOVE DETAILS ARE OF TYPICAL NATURE TO INDICATE THE TYPE OF STRUCTURE AND SPACING OF STRUCTURAL MEMBER. ACTUAL CONSTRUCTION DESIGN MAY BE DIFFERENT BASED ON SITE CONDITIONS.
10. FOR CAMBER/SUPERELEVATION AND CROSS SECTION OF HIGHWAY AT SPECIFIC STRUCTURE LOCATIONS, RELEVANT TYPICAL CROSS SECTION DRAWING SHALL BE REFERRED.

LEGEND:

1) FRL – FINISHED ROAD LEVEL
2) TYP – TYPICAL
3) NGL – NATURAL GROUND LEVEL
4) LHS – LEFT HAND SIDE
5) U/S – UPSTREAM
6) D/S – DOWNSTREAM

REFERENCE DRAWINGS: (LATEST REVISION)

N0533/E/MAJ/DD–610 .... TYPICAL DOUBLE CELL BOX CULVERT VARIABLE FILLING (SKEW) GENERAL ARRANGEMENT DRAWING (SHEET 2 OF 2)

THE DIMENSIONS SHOWN ARE FOR TENDER PURPOSE ONLY

DATE	No.	REVISION	DRAWN	PREPARED	CHECKED	APPROVED
02/01/26	R0	FIRST SUBMISSION	SSA	AGA	MD	MD

☑ APPROVAL	☐ CONSTRUCTION				
☐ INFORMATION	☐ TENDER				
☐ DRAFT	☐ PRELIMNARY				
RELEASED FOR					
GIS		MAJOR STRUCTURES			
HIGHWAYS		IRRIGATION/ WATER RESOURCES			
ELECTRICAL		PHE / PLUMBING/ FIREFIGHTING			
BUILDINGS		MECHANICAL / HVAC			
ARCHITECTURE					
CHECKED BY / SIGN / DATE		CHECKED BY / SIGN / DATE			
FOR INTERNAL OFFICE ONLY					

CONSULTANT
STUP Consultants Pvt. Ltd.
REGISTERED OFFICE : Unit No.2702, 27th Floor, Rupa Renaissance, P.No.D–33 & D–207, Juinagar, MIDC TTC Industrial Area, Turbhe, Navi Mumbai, Thane, Maharashtra – 400705. Tel: +91 (022) 68067777, E–mail: mumbai@assystem.com
OFFICE OF ORIGIN : 8th, JP & Devi Jambulekshwar Arcade 4th Floor, Millers Road Bengaluru – 560 052 Tel.: 080 – 40 39 79 79 Email : bangalore@assystem.com

OWNER: BANGALORE DEVELOPMENT AUTHORITY

CONTRACTOR

PROJECT: CONSTRUCTION OF EIGHT LANE BENGALURU BUSINESS CORRIDOR (BBC)

TITLE: TYPICAL DOUBLE CELL BOX CULVERT VARIABLE FILLING (SKEW) GENERAL ARRANGEMENT DRAWING (SHEET 1 OF 2)

DRG.NO.: N0533/E/MAJ/DD–609 (R0) (SHEET 1 OF 2)

DATE	DRAWN	PREPARED	CHECKED	APPROVED	SCALE
02–01–2026	SSA	AGA	MD	MD	AS SHOWN

DISCLAIMER: ONLY APPROVED AND SIGNED HARD COPIES SHALL BE USED FOR CONSTRUCTION

THIS DRAWING IS THE PROPERTY OF STUP CONSULTANTS Pvt. LTD. IT SHOULD NOT BE USED, COPIED, OR REPRODUCED WITHOUT THEIR WRITTEN PERMISSION.

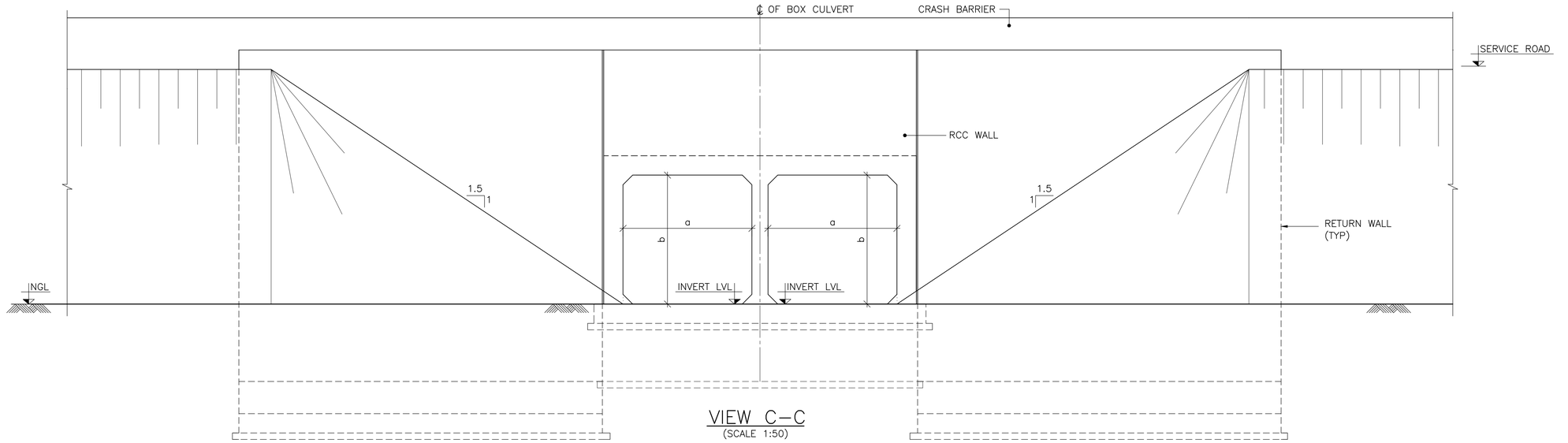

VIEW C–C
(SCALE 1:50)

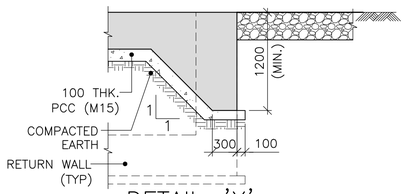

DETAIL–'X'
DETAILS OF SHEAR KEY
(SCALE 1:50)

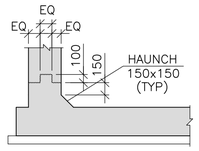

DETAIL–'Y'
(SCALE 1:50)

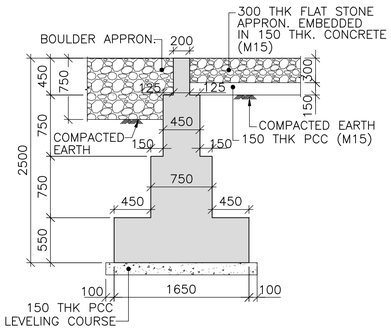

TYPICAL CROSS SECTION OF CURTAIN WALL
(DOWN STREAM SIDE)
(SCALE 1:50)

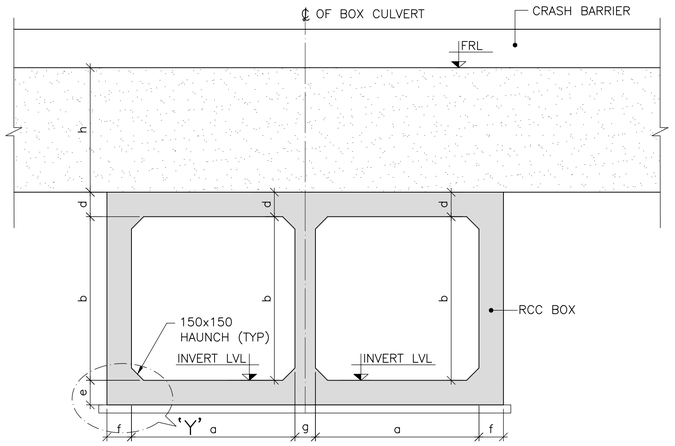

SECTION B–B
(SCALE 1:50)

SR NO.	CD NO.	PROPOSED CHAINAGE (km)	SPAN ARRANGEMENT (m) (SQUARE DIMENSION)	PROPOSED FRL AT MEDIAN EDGE (m)	PROPOSED INVERT LEVEL (m)	EMBANKMENT FILL (m) (h)	SKEW ANGLE (DEGREE)	PROPOSED FORMATION WIDTH (M)			DIMENSIONS OF PROPOSED BOX (m) (SQUARE DIMEMNSIONS)						
								MEDIAN	MAIN CARRIAGEWAY								
									LHS	RHS	a	b	c	d	e	f	g
1	6/1	5+810	2X2X2	867.583	860.220	4.850	30	4	14	14	2.000	2.000	0.150	0.300	0.300	0.300	0.250
2	20/1	19+989	2x3x2	897.960	892.267	3.480	6	4	14	14	3.000	2.000	0.150	0.500	0.500	0.500	0.400

THE DIMENSIONS SHOWN ARE FOR TENDER PURPOSE ONLY

NOTES:
1. FOR NOTES REFER DRAWING NO. N0533/E/MAJ/DD–609 (SHEET 1 OF 2)

REFERENCE DRAWINGS: (LATEST REVISION)
N0533/E/MAJ/DD–609 .... TYPICAL DOUBLE CELL BOX CULVERT VARIABLE FILLING (SKEW) GENERAL ARRANGEMENT DRAWING (SHEET 1 OF 2)

DATE	No.	REVISION	DRAWN	PREPARED	CHECKED	APPROVED
02/01/26	R0	FIRST SUBMISSION	SSA	AGA	MD	MD

☑ APPROVAL ☐ CONSTRUCTION
☐ INFORMATION ☐ TENDER
☐ DRAFT ☐ PRELIMNARY

RELEASED FOR

GIS						
HIGHWAYS			MAJOR STRUCTURES			
ELECTRICAL			IRRIGATION/ WATER RESOURCES			
BUILDINGS			PHE / PLUMBING/ FIREFIGHTING			
ARCHITECTURE			MECHANICAL / HVAC			
CHECKED BY	SIGN	DATE	CHECKED BY	SIGN	DATE	

FOR INTERNAL OFFICE ONLY

CONSULTANT
STUP Consultants Pvt. Ltd.
REGISTERED OFFICE : Unit No.2702, 27th Floor, Rupa Renaissance, P.No.D–33 & D–207, Juinagar, MIDC TTC Industrial Area, Turbhe, Navi Mumbai, Thane, Maharashtra–400705. Tel: +91 (022) 68067777, E–mail: mumbai@asssystem.com
OFFICE OF ORIGIN : #69, JP & Devi Jambukeshwar Arcade 4th Floor, Millers Road Bengaluru – 560 052 Tel.: 080 – 40 39 79 79 Email : bangalore@asssystem.com

OWNER: BANGALORE DEVELOPMENT AUTHORITY
CONTRACTOR:
PROJECT: CONSTRUCTION OF EIGHT LANE BENGALURU BUSINESS CORRIDOR (BBC)
TITLE: TYPICAL DOUBLE CELL BOX CULVERT VARIABLE FILLING (SKEW) GENERAL ARRANGEMENT DRAWING (SHEET 2 OF 2)
DRG.NO.: N0533/E/MAJ/DD–610 (R0)

DATE: 02–01–2026
DRAWN: SSA
PREPARED: AGA
CHECKED: MD
APPROVED: MD
SCALE: AS SHOWN

DISCLAIMER: ONLY APPROVED AND SIGNED HARD COPIES SHALL BE USED FOR CONSTRUCTION